Series **Ergonomic**

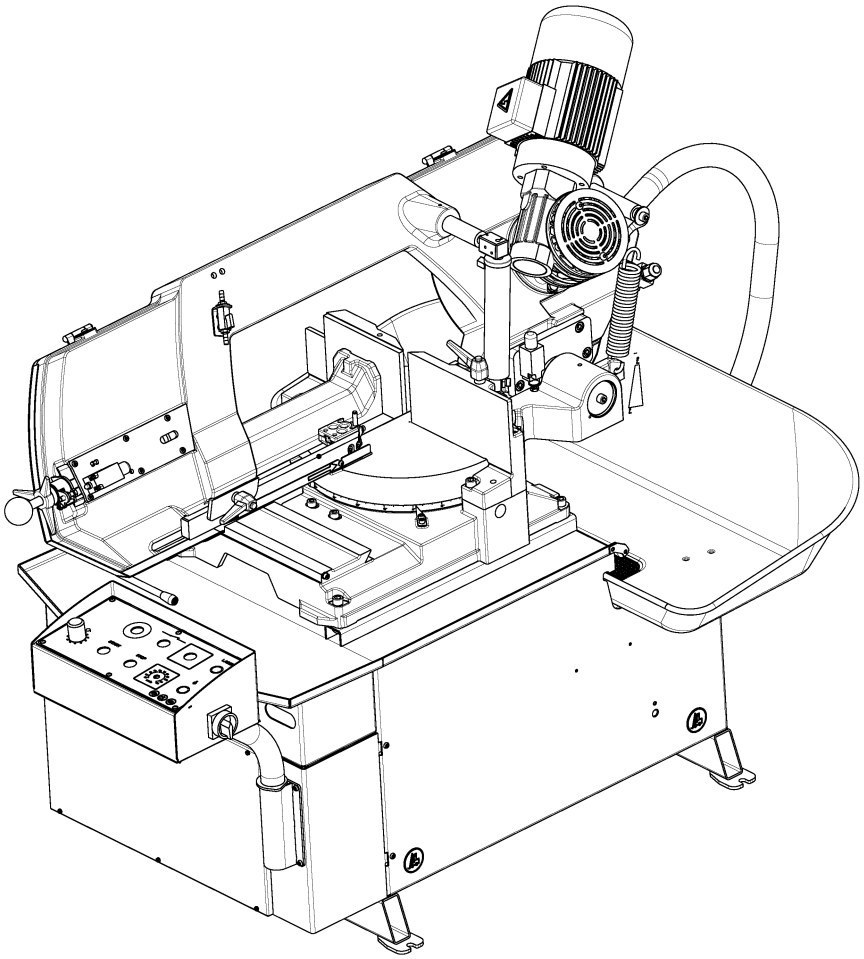

Ergonomic 320.258 DG

Operating instructions

Before transporting and using the machine, please read the instructions thoroughly!

Seriové číslo / Serien Nummer / Serial Number _____

Service and information

Your BOMAR dealer:

Direct BOMAR contact:

BOMAR spol. s r.o.
Těžební 1236/1
62700 Brno
Czech Republic, EU

telefon: +420 – 533 426 100
fax: +420 – 533 426 109
e-mail: info@bomar.cz
www: http://www.bomar.cz

We are available:

Mondays to Fridays 7^{00} – 16^{00}

Version:

1.17 / Feb. 2020

rev. 1

BOMAR, spol. s r.o. © – Subject to modifications and amendments.

EC/EU Declaration of Conformity

[1) 2)] We:

BOMAR, spol. s r.o.
Těžební 1236/1
627 00 Brno, Czech Republic
Id. No: 48908827

declare herewith

that the following designated device based on its conception and construction as well as the design launched by us meets the relevant basic safety requirements of the decrees of the government.

This statement applies exclusively to the machine device in conditions in which it was brought to the market. It does not apply to parts subsequently added by the end user or to modifications performed subsequently by the end user.

In the event of any device modification not approved by us this declaration shall lose its validity

Name:	**Band Saw**
Type :	**Ergonomic 320.258 DG**
Serial number:	500 – 10 000
Manufacturer	**BOMAR, spol. s r.o., Těžební 1236/1, 627 00 Brno**

Product data

Determination:	for cross dividing and cutting of rolled and towed bars and profiles made of steel, stainless steel, non-ferrous metals and plastics
Description:	Stand, table, cutting unit with the saw band and drive, clamping device, cooling system, el. switch board with control panel.
	Pneumatic *NO* ☒ *YES* ☐ Hydraulic *NO* ☒ *YES* ☐ Control system *NO* ☒ *YES* ☐
Technical data:	Cutting rate 20-120 m.min^{-1}
	Cutting angle -45°- to -60°
	Total dimensions in mm (lxwxh) 2000x1150x1700 mm
	Total power requirement 1,8 kW
	Weight 390 kg

Documentation:
Technical documentation for this machine device was elaborated in compliance with Government regulation no. 176/2008, Annex 7, part A.

The device meets relevant requirements of the given directives: **2006/42/EC**
2014/30/EU

The applied harmonized standards, National standards and technical specifications:

ČSN EN ISO 12100:2011	ČSN EN ISO 16093:2018	ČSN EN ISO 13857:2008
		ČSN EN 60204 -1 ed.3:2019
ČSN EN 55011 ed.4+A1:2017	ČSN EN 61000-6-2 ed.3:2006	ČSN EN 61000-6-4 ed.2+A1:2011

The product is safe on condition of the common and determined usage.

The conformity judging was performed according to §12, par. 3, let. a), of the Law no. 22/1997 Coll. as amended.
The declaration of conformity was carried out in the cooperation with the [3)] TÜV SÜD Czech s.r.o, Novodvorská 994, 142 21 Prague 4 – Czech Republic, Identification number: 63987121 - Inspection body no. 4002.

The inspection certificate no **07.801.283** was issued

Brno,.21.08.2019

Point of issue, datum

BOMAR, spol. s r.o.
Těžební 1236/1, 627 00 Brno
Czech Republic
IČO: 48908827
DIČ: CZ48908827

Alfred Pichlmann, Managing Director

Name and function of the responsible subject, signature

1) Name, address and identification number of the subject issuing the conformity declaration (producer of importer)
2) Person authorized to complete the technical documentation
3) The authorized or accredited body co-operating on the conformity judging

!	If the equipment is installed without safety equipment offered by BOMAR, spol. s ro or its agents and used by the customer (or buyer) then EC declaration loses validity. EC Declaration of conformity is valid only if customer (buyer) installed the BOMAR safety equipment with the machine or with some other with equivalent safety device in accordance with current applicable regulations and standards. All machine elements and components that were built into the device by BOMAR, spol. s ro have been declared "identical" to a safety device, as offered by BOMAR, spol. s ro or its agents.

Content

1. BEZPEČNOSTNÍ POKYNY / SICHERHEITSHINWEISE / SAFETY NOTES 9

1.1. Machine determination 11
1.2. Protective clothing and personal safety 11
1.3. Safety notes for machine operator 12
1.4. Safety notes for the servicing and repairs 13
1.4.1. Safety notes for the servicing and repairs on hydraulic unit 13
1.5. Safety notes for the cooling 13
1.5.1. Instructions for first aid 13
1.6. Safety machine accessories 14
1.6.1. Emergency Stop Switch 14
1.6.2. Arm cover 15
1.6.3. Saw band covers 16
1.6.4. Saw band stretching and rupture inspection 17
1.7. Umístění štítku stroje / Maschinenschild position / Position of machine label 18
1.8. Umístění bezpečnostních značek / Verteilung der Sicherheitszeichen / Position of safety symbols 19

2. DOKUMENTACE STROJE / DOKUMENTATION DER MASCHINEN / MACHINE DOCUMENTATION 21

2.1. Technická data / Technische Daten / Technical data 23
2.2. Rozměrové schéma / Aufstellzeichnung / Installation diagram 24
2.3. Popis / Bescreibung / Description 25
2.4. Transportation and stocking 26
2.4.1. Conditions for transportation and stocking 26
2.4.2. Transport and stocking preparations 26
2.4.3. Transport and stocking 26
2.4.4. Transportní schéma / Transport schema / Transport schneme 27
2.5. Activation 28
2.5.1. Machine working conditions 28
2.6. Band saw unpacking and assembling 28
2.6.1. Installation of the length stop for the material length setting 28
2.6.2. Attachment of the cooling liquid tub 30
2.6.3. Assembly of the hand wheel 30
2.6.4. Machine installing and leveling 31
2.6.5. Kotevní plan / Verankerungsplan / Grounding plan 32
2.6.6. Electrical connection 33
2.6.7. Check the direction of the saw band 33
2.6.8. Inspection of the connection to the electrical network 34
2.6.9. Filling of the cooling system 34
2.7. Machine functions check 34
2.8. Machine disposal after lifetime 34
2.9. Saw band 35
2.9.1. Saw band size 35
2.9.2. Selection of the saw band tooth system 35
2.9.3. Saw band running-in 35
2.9.4. Tables for teeth selection 36

3. OVLÁDÁNÍ STROJE / BEDIENUNG DER MASCHINE / MACHINE CONTROL 37

3.1. Starting the band saw and switching on the safety circuits 39
3.2. Control elements 40
3.3. Machine control 42
3.3.1. Cutting 42
3.3.2. Setting of the material length 44
3.3.3. Setting of the cutting angle 45
3.3.4. Setting of the optimal span of the guiding cubes 48
3.3.5. Cutting speed adjustment 48
3.3.6. Speed adjustment of the arm lowering 48
3.3.7. Setting the type of cooling 49
3.4. Material insertion 49
3.4.1. Selecting means of manipulation 49
3.4.2. Insertion 49
3.4.3. Bundle material cutting 49

4. ÚDRŽBA STROJE / WARTUNG / MACHINE SERVICE 51

4.1. Saw band dismantling 53

4.2. Saw band installation 55
4.3. Saw band stretching and inspection 57
4.3.1. Saw band stretching 58
4.3.2. Saw band inspection 58
4.4. Adjustment 59
4.4.1. Saw band run adjustment 59
4.4.2. Hard metal guides adjustment on the machine 59
4.4.3. Guide cube adjustment 60
4.4.4. Brush adjustment 60
4.4.5. Adjusting the limit switch of the saw band stretching 61
4.4.6. Saw frame lower position stop adjustment 62
4.4.7. Adjustment of the limit switch of saw frame lower stop 62
4.5. Cooling agents and chip disposal 63
4.5.1. Coolant inspection 63
4.5.2. Cooling liquid preparation 64
4.5.3. Chips disposal 64
4.6. Gearbox oils and greases 65
4.6.1. Gearbox oils 65
4.6.2. Lubrication greases 66
4.6.3. Lubrication 66
4.6.4. Hydraulic oils 67
4.7. Machine cleaning 67
4.8. Worn pieces replacement 68
4.8.1. Hard metal guides replacement 68
4.8.2. Saw band guiding rollers replacement 69
4.8.3. Worn brush replacement 70
4.8.4. Stretching wheel replacement 71
4.8.5. Driving wheel replacement 73
4.8.6. Cooling pump replacement 74

5. ZÁVADY / STÖRUNGEN / TROUBLESHOOTING 77

5.1. Mechanical problems 79
5.2. Electrical problems 81
5.2.1. Hydraulic problems 82

6. SCHÉMATA / SCHEMAS / SCHEMATICS 85

6.1. Elektrická schémata / Elektroschemas / Wiring diagrams 3x400 V + PE, 50Hz 87
6.2. Elektrické schéma /Elektroschema /Wiring diagrams – 3x230 V + PE, 50H 99
6.3. Elektrické schéma / Elektroschema / Wiring diagrams – – 3x230 V + PE, 50/60 Hz –frekv. měnič / Frequenzumrichter / frequency convertor 112
6.4. Hydraulické schema / Hydraulisches Schéma / Hydraulic diagram 126

7. VÝKRESY SESTAV PRO OBJEDNÁNÍ NÁHRADNÍCH DÍLŮ / ZEICHNUNGEN FÜR BESTELLUNG DER ERSATZTEILE / DRAWING ASSEMBLIES FOR SPARE PARTS ORDER 129

7.1. Ergonomic 320.258 DG 130
7.2. Kusovník / Piece list / Stückliste - Ergonomic 320.258 DG 131
7.3. Ergonomic 320.258 DG 132
7.4. Kusovník / Piece list / Stückliste - Ergonomic 320.258 DG 133
7.5. Chlazení / Cooling / Kühlung 134
7.6. Kusovník / Piece list / Stückliste - Chlazení / Cooling / Kühlung 135
7.7. Podstavec / Base / Untersatz 136
7.8. Kusovník / Piece list / Stückliste - Podstavec / Base / Untersatz 137
7.9. Vana/ Tank/ Wanne 138
7.10. Kusovník / Piece list / Stückliste - Vana/ Tank/ Wanne 139
7.11. Konzola otočná / Turnable consol / Drehkonsole 140
7.12. Kusovník / Piece list / Stückliste - Konzola otočná / Turnable consol / Drehkonsole 141
7.13. Kartáč / Brush / Bürste 142
7.14. Kusovník / Piece list / Stückliste - Kartáč / Brush / Bürste 143
7.15. Rozvaděč elektro / Electro distributor / Schaltschrank 145
7.16. Ovládací panel / Control panel / Bedienpult 146
7.17. Kusovník / Piece list / Stückliste Ovládací panel / Control panel / Bedienpult 147
7.18. Rameno / Saw arm / Sägerahmen 148
7.19. Kusovník / Piece list / Stückliste - Rameno / Saw arm / Sägerahmen 149
7.20. Pohon / Drive / Antrieb 150
7.21. Kusovník / Piece list / Stückliste Pohon / Drive / Antrieb 151
7.22. Vedení pásu / Belt guide / Sägebandführung 152
7.23. Kusovník / Piece list / Stückliste - Vedení pásu / Belt guide / Sägebandführung 153
7.24. Kostka vodící / Lead cube / Führungsklotz 154
7.25. Kusovník / Piece list / Stückliste - Kostka vodící / Lead cube / Führungsklotz 155
7.26. Kostka vodící / Lead cube / Führungsklotz 156
7.27. Kusovník / Piece list / Stückliste - Kostka vodící / Lead cube / Führungsklotz 157
7.28. Napínání / Tensioning / Spannung 158
7.29. Kusovník / Piece list / Stückliste - Napínání / Tensioning / Spannung 159

7.30. Válec zvedací / Lifting cylinder / Hebezylinder....160
7.31. Kusovník / Piece list / Stückliste - Válec zvedací / Lifting cylinder / Hebezylinder....161
7.32. Stůl / Table / Tisch....162
7.33. Kusovník / Piece list / Stückliste - Stůl / Table / Tisch....163
7.34. Svěrák / Vice / Schraubstock....164
7.35. Kusovník / Piece list / Stückliste - Svěrák / Vice / Schraubstock....165
7.36. Doraz / Stop piece / Anschlag....166
7.37. Kusovník / Piece list / Stückliste - Doraz / Stop piece / Anschlag....167

8. VÝKRESY SESTAV PRO OBJEDNÁNÍ NÁHRADNÍCH DÍLŮ – VOLITELNÉ VYBAVENÍ / ZEICHNUNGEN FÜR BESTELLUNG DER ERSATZTEILE - OPTIONALE ZUBEHÖR / DRAWING ASSEMBLIES FOR SPARE PARTS ORDER – OPTIONAL ACCESSORIES....169

8.1. Odměřování / Measuring / Gehrungsmessung....170
8.2. Laser-Liner....171
8.3. Upínání horní / Top clam / Spannvorrichtung oben....172

1. Bezpečnostní pokyny / Sicherheitshinweise / Safety notes

The operating instructions must be read by any person, who gets in touch with the machine during transportation, installation, using, servicing, reparation, stocking or removal!

The operating instructions include relevant information. The operator must familiarize himself with the installation and operation, safety notes and machine servicing, to reach maximum reliability and lifespan. The operating instructions serve to avoid risks, which are linked with work on the machine. Before transporting and using the machine, please read the instructions thoroughly!

Attention!
The operating instructions must be available at the machine position! Keep the operating instructions in a good condition!

1.1. Machine determination

The band saw **Ergonomic 320.258 DG** is determined for cutting and shortening of rolled bars and drawn bars as well as profiles from steels, stainless steels, non-ferrous metals and plastics **with cutting angles -45° to 60°.**

Combustible materials are excluded from cutting! Any other usage and operation outside this range are unauthorized and the manufacturer/supplier does not accept any responsibility for any damages resulting from such misuse. **The operator has full responsibility!**

The machine is equipped with safety and protective measures for both the operator and the machine to be protected. Nevertheless, these measures cannot prevent all injuries. All personnel must read this chapter and understand it, before they start to work on the machine. **Always follow the instructions about work safety!** The personnel must take into account other aspects of the risk, which include the conditions of the working place and the material.

1.2. Protective clothing and personal safety

Wear fitting clothes! Loosely fitting clothes may be caught in the moving machine parts and cause serious injuries.

Attention!
Gloves can be worn only when manipulating with the material or replacing parts! The machine and its accessories must be inactive!
If the machine is running, you must not wear gloves! There is a higher risk of getting caught in the moving machinery!

Wear protective gloves! Material cuts and saw band have sharp edges and may cause injuries.

Wear protective shoes with non-skid soles! Unsuitable shoes may cause balance loss and following injury. Falling pieces may cause serious injuries too.

Wear protective goggles! Chips and cooling liquid may damage your eyes.

Always wear ear protection! Most of the machines emit up to 80 dB and may damage your hearing.

Do not wear jewellery and always tie back long hair! Moving machine parts can catch jewellery or loose hair and may cause serious injuries.

Operate the machine only when you are fit enough to work. Illnesses or injuries diminish concentration. **Avoid machine work, which may compromise the safety of you and your colleagues!**

Attention!
Mind the safety signs on the machine. Do not remove or damage them!

1.3. Safety notes for machine operator

Attention!
Machine can be operated by person older than 18 years!
Machine can be operated only by a person physically and mentally fit for this activity

Follow the instructions and orders about work safety!
Read the operating instructions, before you start to work on the machine! Keep the operating instructions in good condition!

Machine can be operated only by one person. Machine operator is responsible for other people present near the machine.

Close covers before starting the machine and check, if the covers are not damaged. Damaged covers must be repaired or changed immediately. Do not start the machine, if the cover is removed! Check, if the electric cables are not damaged.

- Do not hold the material for clamping in the vice and when cutting!
- Do not operate the buttons and switches on the control panel, when you have gloves!

Attention!
Do not connect the machine to electricity if the covers are removed. Do not touch the electrical equipment or wiring.

- For machine starting take care, that there is nobody in the working area of the machine (the working area of the vice, the saw band, the saw arm etc.).
- Under no circumstances touch the rotating elements.
- Work on the machine only when the machine is in good condition!
- Check at least once in a shift, if the machine is not damaged. If the machine is damaged, you must bring the machine to a halt and inform your superior!
- Keep your working area clean! Ensure sufficient lighting in the working area.
- Take off the spilt water or the oil from the floor and dry it. Do not touch the cooling liquid with bare hands! Do not set the nozzle of the cooling liquid, when the machine is started running.
- Do not remove the chips from the working area of the machine, when the machine is running!
- Do not use compressed air for the machine cleaning or for the chip removal!
- Use the protective instruments for chip removal!

1.4. Safety notes for the servicing and repairs

Switch off the main switch and lock it, before you start service work! Otherwise, there is a possibility of starting the machine accidentally.

Only qualified person can do the servicing and repairs. For parts replacement, use only those, which are identical with the originals. Otherwise, there is possibility of health hazard. Use only recommended types of hydraulic oils, oils and lubricants!

Attention!
Only a qualified professional can carry out the servicing and repairs of the electrical equipment! Take special care during the work with electrical equipment. High voltage shock can have fatal consequences! Always follow the work safety instructions! Otherwise, there is possibility of heavy injury!

Do not remove lock the limit switches or safety equipment! Any use of the saw, accessories or machine parts other than that intended by the BOMAR, spol. s r.o. company is not permitted. The guarantee on this product will be lost afterward and BOMAR, spol. s r.o. takes no responsibility for damage caused.

1.4.1. Safety notes for the servicing and repairs on hydraulic unit

Compliance with the principles of cleanness is a basic requirement for trouble-free operation of hydraulic equipment. Hydraulic components are products made with high precision, and any contamination leads to a reduction of lifetime and even malfunction. The consequences are very difficult and expensive to remove.

Always use clean tools. Never put parts and fasteners which are a part of the hydraulic circuit on a dirty surface. The best cleaning agent is crepe paper. The fibers of the cleaning cloths can also cause malfunction.

Remove the protective caps from the threaded chamber just before the assembly of the unit.

Flush hoses and pipes before mounting with gasoline or other cleaning agent and blow compressed air through them.

All fittings must be properly tightened. However, do not use brute strength.

1.5. Safety notes for the cooling

Attention!
- *When handling the coolant always keep to the work safety directives and instructions of the manufacturer.*
- *When handling cooling agents always wear safety fluid-proof gloves!*
- *Wear protective goggles!*
- *Cooling liquid can get in contact with your eyes and may cause permanent severe injuries*

1.5.1. Instructions for first aid

1. Pull off and safely remove polluted, soaked clothing.
2. If inhaled, go out on fresh air or look for first aid treatment.
3. Wash with water and eventually treat with crème any points of contact with the skin.
4. Flush your eyes with water and seek out a doctor.
5. If swallowed, drink a lot of water and induce vomiting. Look for medical help

1.6. Safety machine accessories

The machine is equipped with safety accessories. They protect the operator from injuries and the machine from damage. The safety accessories are blocking accessories, emergency switches and covers. Check the function of the safety accessories once a week. If the safety accessories are not fulfilling their function, stop your work and repair or change the safety accessories.

Enhanced risk!
Do not come into or intervene in the cutting area. Otherwise, there is a possibility of heavy injury.

1.6.1. Emergency Stop Switch

Emergency Stop Switch is used for emergency switching – off the machine in case defect or health hazard. By pressing **Emergency Stop Switch** will immediately stop all dangerous machine movements.

If any damages or fault appears, immediately press Emergency Stop Switch!

It is possible to release the pressed button by twisting of the upper part of the button.

The **Emergency Stop Switch** is placed at the control panel of the machine.

Release of the pressed button is possible by turning the upper part of the button.

1.6.2. Arm cover

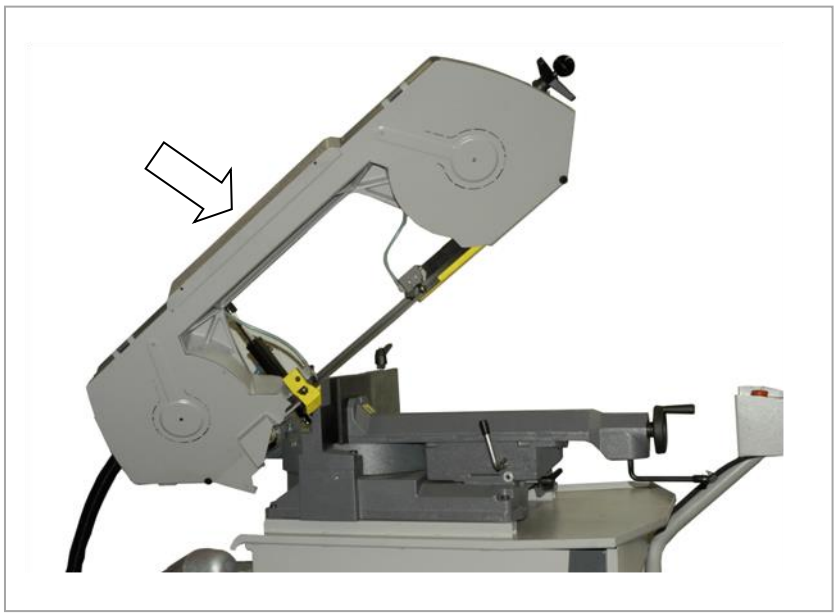

If the cover is opened during operation, the limit switch is opened and the band saw is stopped. The machine cannot be run with the arm open even in the service mode.

Make sure the arm cover is closed before starting the machine!

1.6.3. Saw band covers

These three covers cover the band of the saw

- from the moveable guiding cube to the arm

- from the jaw of the vice to the arm (both sides)

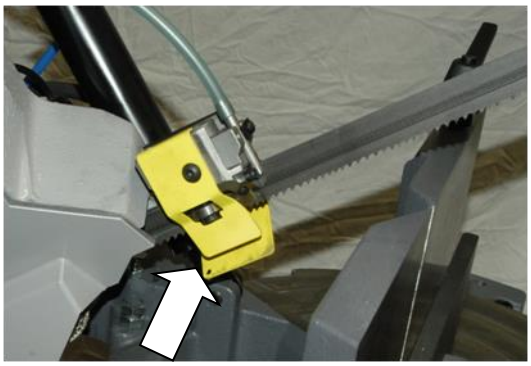

- Never turn the band drive on, if these covers are not mounted

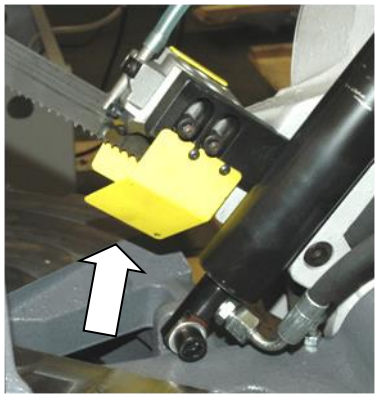

1.6.4. Saw band stretching and rupture inspection

This device checks the saw band stretching and causes an immediate machine shut – down in case the band ruptures.

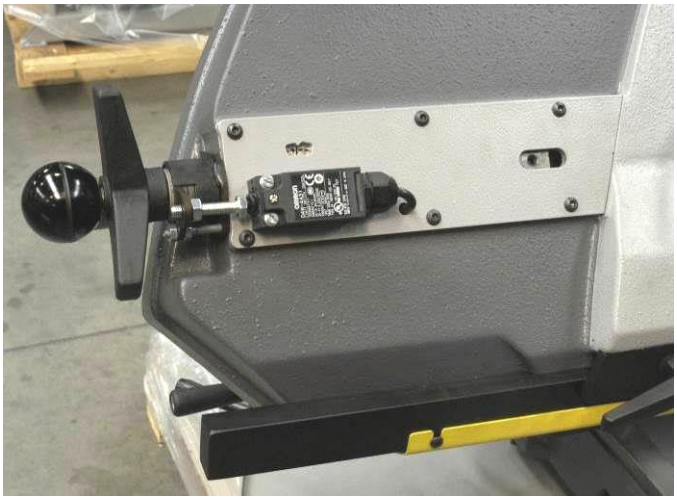

The device contains a limit switch. Its setting is described in the chapter Machine maintenance. Check the stretching carefully and periodically and adjust it eventually.

1.7. Umístění štítku stroje / Maschinenschild position / Position of machine label

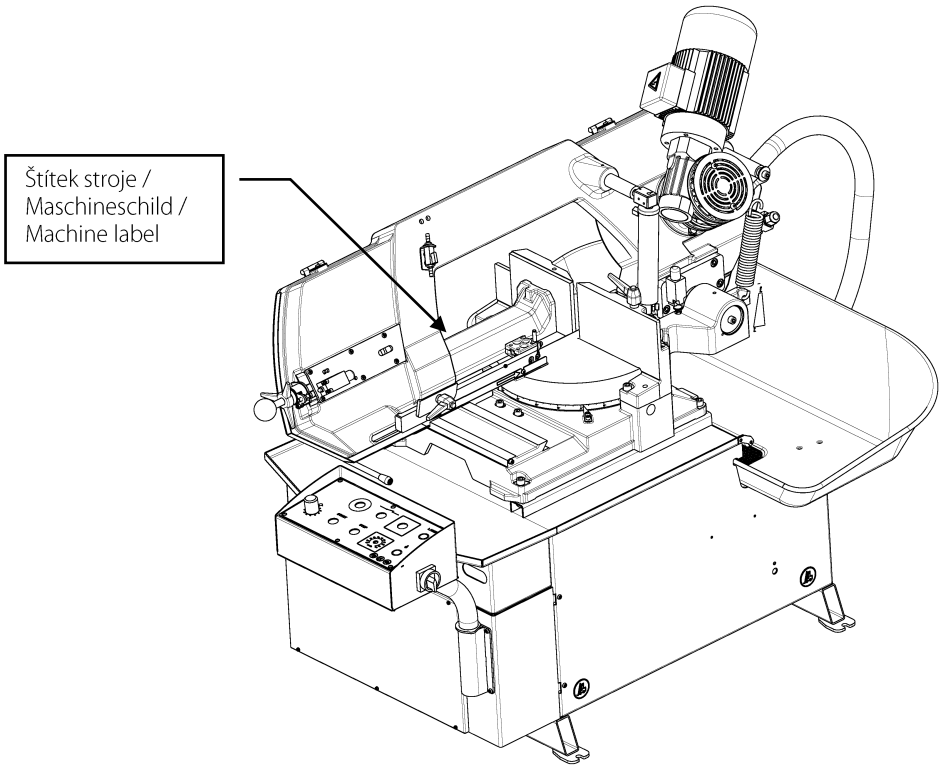

1.8. Umístění bezpečnostních značek / Verteilung der Sicherheitszeichen / Position of safety symbols

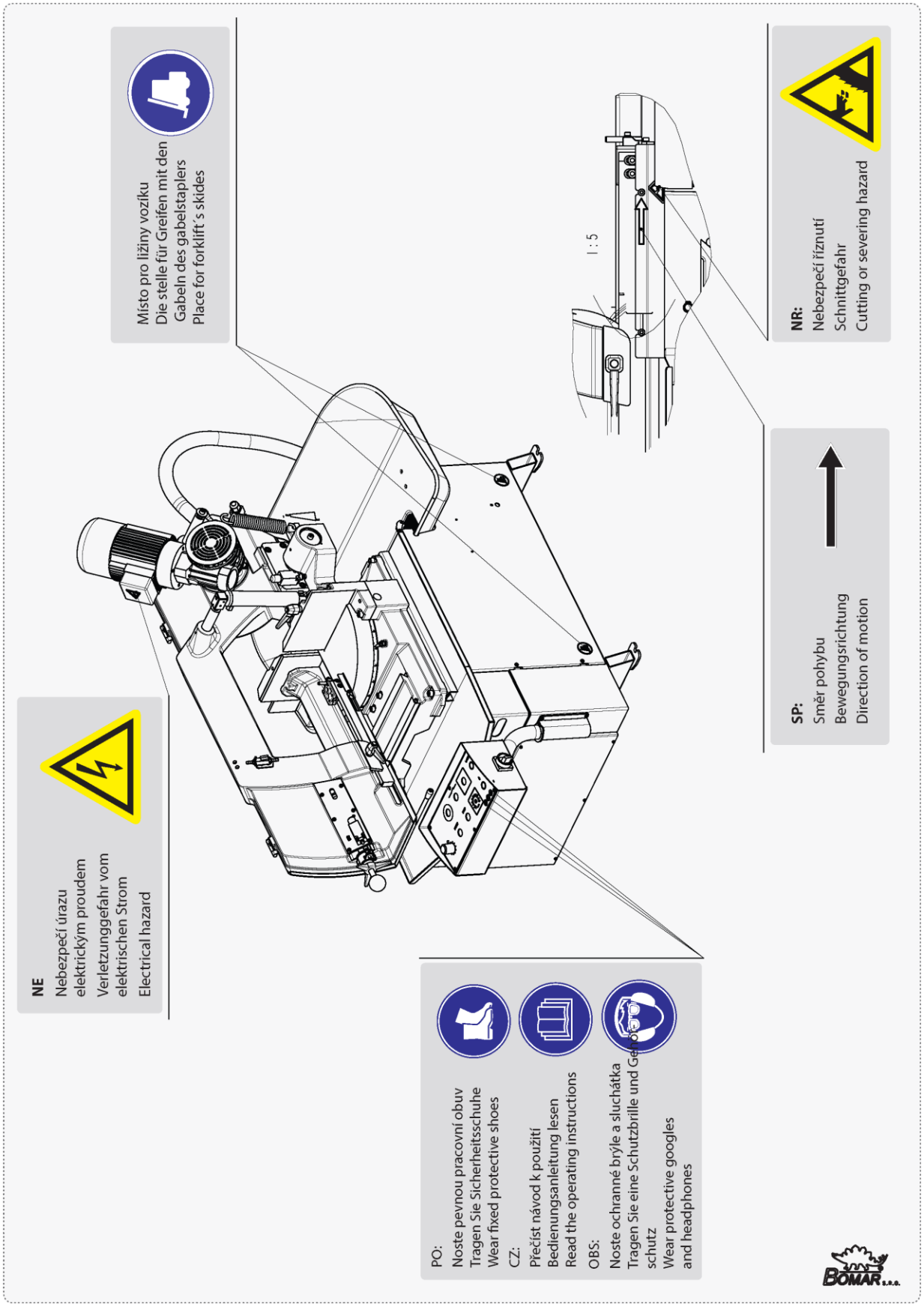

2. Dokumentace stroje / Dokumentation der Maschinen / Machine documentation

2.1. Technická data / Technische Daten / Technical data

Hmotnost stroje / Maschinengewicht / Machine weight:	
• Hmotnost / Gewicht / Weight	390 kg
Rozměry stroje / Maschinengröße / Machine size :	
• Délka / Länge / Lenght	2000 mm
• Šířka / Breite / Width	1150 mm
• Výška / Höhe / Height	1700 mm
Elektrické vybavení / Elektrische Ausrüstung / Electical equipment:	
• Napájení / Versorgungsspannun / Supply voltage	~ 3×400V, 50Hz
• Příkon / Gesamptschlusswert / Total Input	1,8 kW
• Max.jištění / Max. Vorschaltsicherung / Max. Fuse	16 A
• Krytí / Schutzart / Protection	IP 54
Akustický tlak / Schalldruckpegel / Acoustic pressure:	
• Ergonomic 320.258 DG	L_{Aeqv} = 59 / 65 dB*
Pohon – pilový pás / Atrieb - Sägeband / Drive – saw band:	
• Typ / Typ / Type	MI70 – PAM90 20/1 - FP - 120 - B14 99.001.260
• Výkon / Leistung / Output	1,5 kW
• Jmenovité otáčky / Motornenndrehzahl / Nominal speed	1390 min^{-1}
Chladící zařízení / Kühlmiteleinrichtung / Cooling equipment:	
• Typ / Typ / Type	68POMPA70M150 + FILTRO – PA, 230 V, 50/60Hz 91.020.035
• Výkon / Leistung / Output	0,05 kW
• Obsah nádrže / Volumen vom Kühlmittel / Capacity	20 dm^3
Rozměr pásu / Sägebanddimension / Band size:	
2910×27(25)×0,90 mm	
Řezná rychlost / Schnittgeschwindigkeit / Cutting speed:	
20–120 m/min	

Řezné rozsahy / Schnittbereiche / Cutting size:

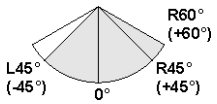

0°	Ø258	320 x 100	275 x 250	250 x 250
R 45°	Ø210	210 x 100	185 x 245	195x195
L 45°	Ø185	195 x 100	150 x 250	170 x 170
R 60°	Ø135	135 x 100	135 x 110	110 x 110

Acoustic pressure level:

The equivalent level of the acoustic pressure A (noise) in the position of the operator is L_{Aeqv}= 59 / 65 dB. The values are indicating the emission levels and may not present safe working levels. Among the factors, which influence the real values of the operator's exposure, are properties of the workshop room, type of cut material and level of wear of the saw band – these may significantly influence the exposure levels.

2.2. Rozměrové schéma / Aufstellzeichnung / Installation diagram

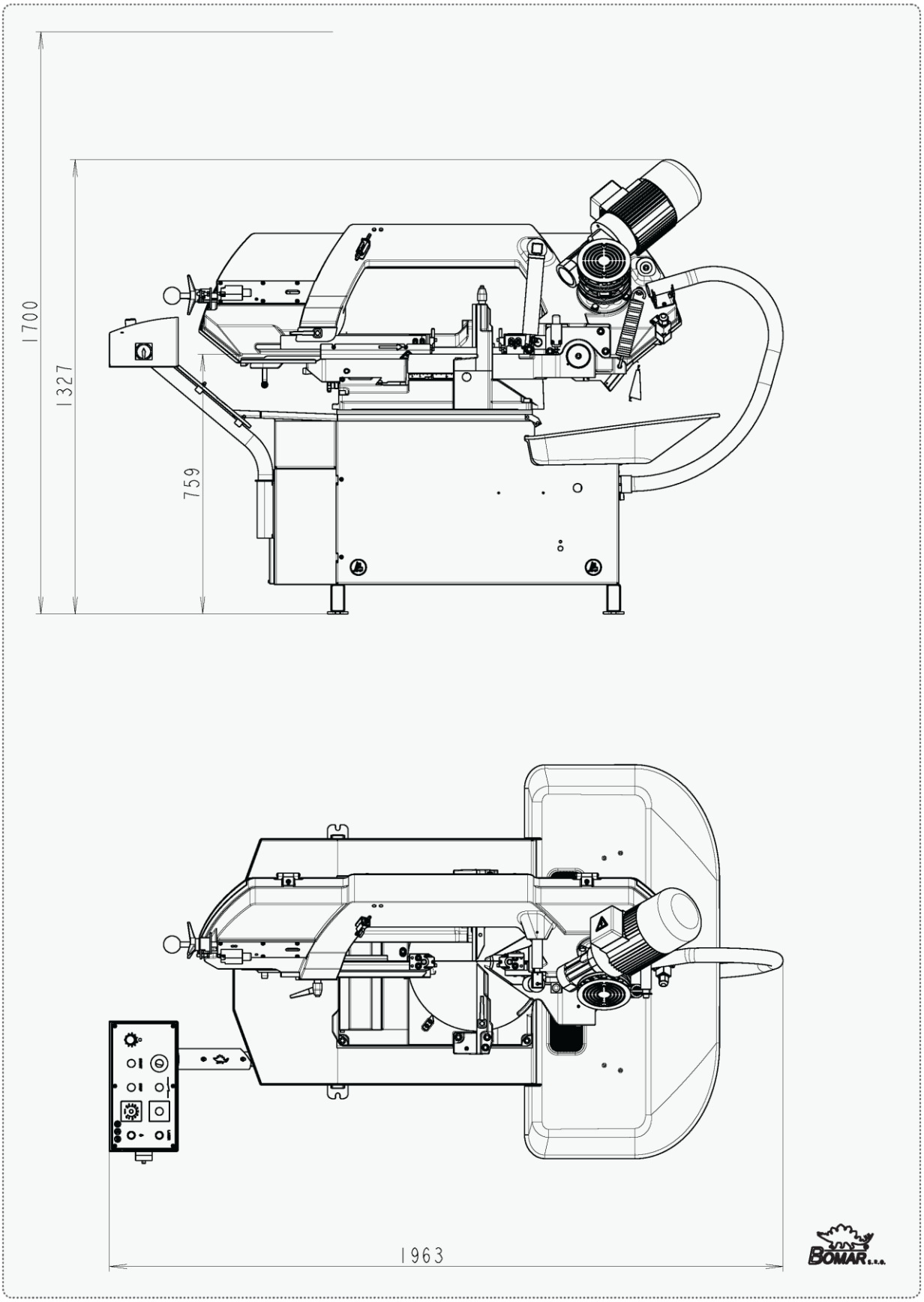

2.3. Popis / Bescreibung / Description

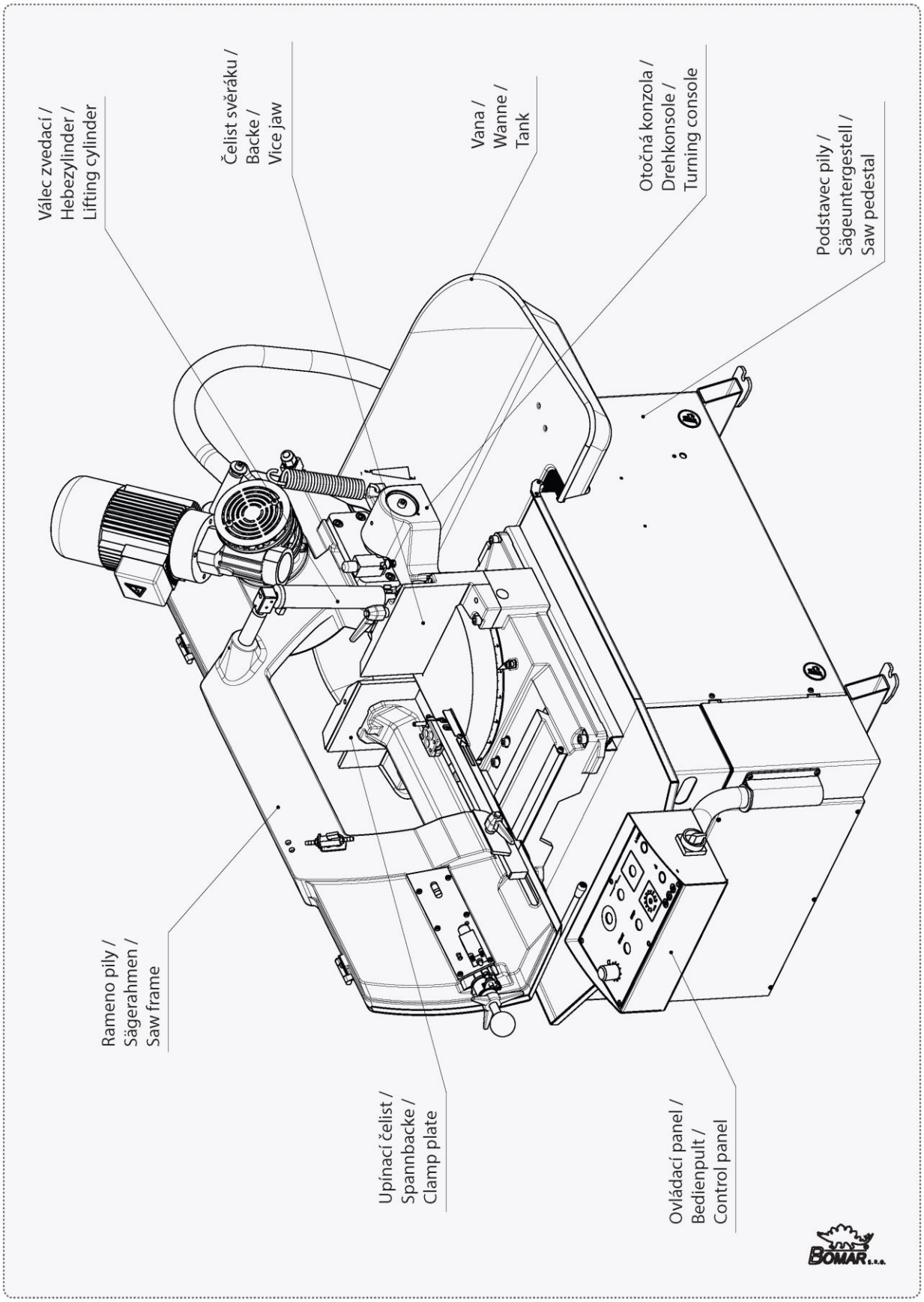

2.4. Transportation and stocking

2.4.1. Conditions for transportation and stocking

Follow the recommendations of the manufacturer for transportation and stocking! If the recommendations are not kept, damage may occur to the machine.

- Don't use a forklift truck for handling the machine, if you do not have a license for it!
- Don't move under suspended loads! Fault in the lifting device may cause serious injury.
- Keep a safe distance from the machine during transport.
- Temperature of the air must be between **-25°C and 55°C**, for a *short period* (max. 24 hours) up to *70°C*.
- Do not expose the machine to radiation (microwave radiation, ultraviolet radiation, laser radiation, x-ray radiation). Radiation can cause problems with the machine function and deteriorating of the condition of the insulation.
- Take measures, to prevent damage by dampness, by vibrations and by shakes.

2.4.2. Transport and stocking preparations

Close the vice and thoroughly oil all smooth surfaces.

Lower the saw frame to the lowest position.

Make sure to empty the machine of all traces of the cooling agent.

Fasten all loose parts securely to the machine.

Pack and wrap the control desk securely to avoid damage during transport.

Put the stickers stating the minimum approximate machine weight to at least five well visible places.

The machine has to be screwed to a pallet for the transportation. Make sure the pallet is strong enough to be able to hold the saw!

2.4.3. Transport and stocking

The machine must be secured during transportation. Screw the pallet to the floor of the vehicle. Be careful that the machine is not damaged during transportation.. It is forbidden to handle the machine in any way different from that written in these operating instructions, the machine can be damaged.

Store the machine only under conditions mentioned in the manual, to avoid damage of the machine

2.4.4. Transportní schéma / Transport schema / Transport schneme

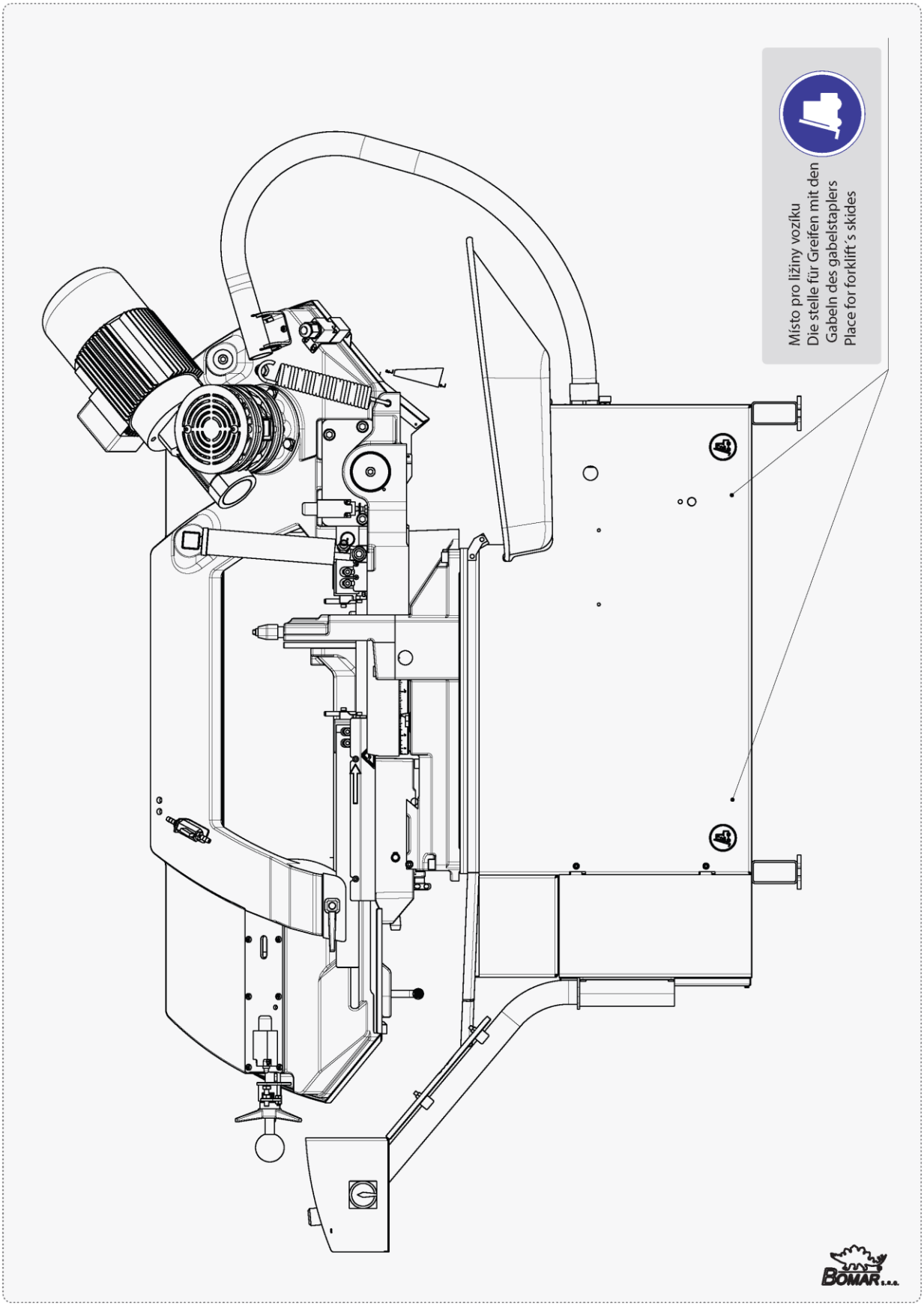

2.5. Activation

2.5.1. Machine working conditions

Keep the conditions of the manufacturer for machine operation! If the recommendations are not kept, damage can occur to the machine.

The manufacturer warrants the correct function of the machine for these conditions:

- At air temperature from ***10°C to 40°C***; the temperature average during 24 hours must ***not exceed over 35°C***.
- At relative dampness of the air in the interval from 30% to 95% (not condensing). Altitude up to 1000 meters.
- Do not expose the machine to any radiation (microwave radiation, ultra-violet radiation, laser radiation, x-ray radiation). Radiation can cause problems with the machine function and deteriorate the condition of the insulation.

2.6. Band saw unpacking and assembling

Remove the wrapping from the machine and unpack all parts.

Attention!
Switch off the main switch and lock it in position, before you start the assembly! Otherwise, there is a possibility of an accidental machine start.

Now put all enclosed parts to place.

2.6.1. Installation of the length stop for the material length setting

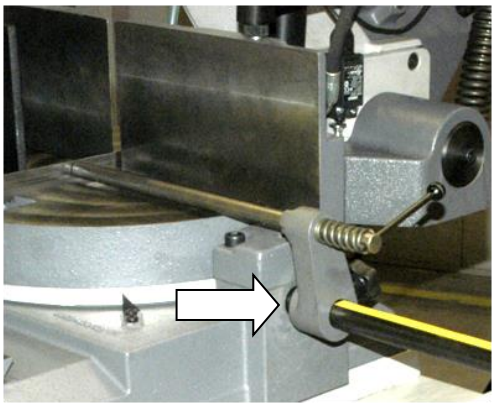

1. Slide the length stop into the hole on the side of the vice.

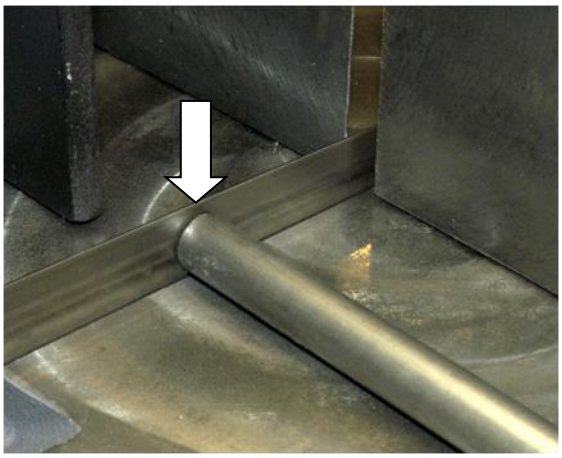

2. Move the length stop up to the saw band.

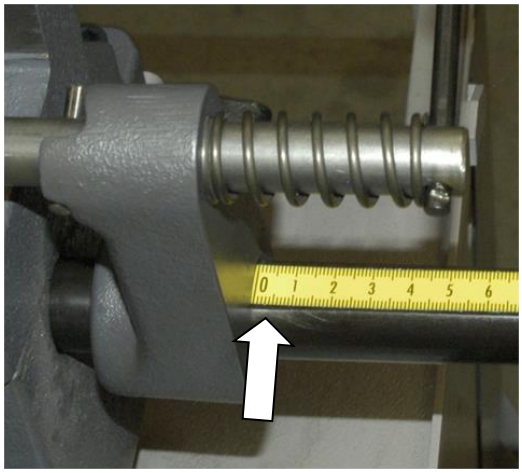

3. Set the measuring unit to zero value.

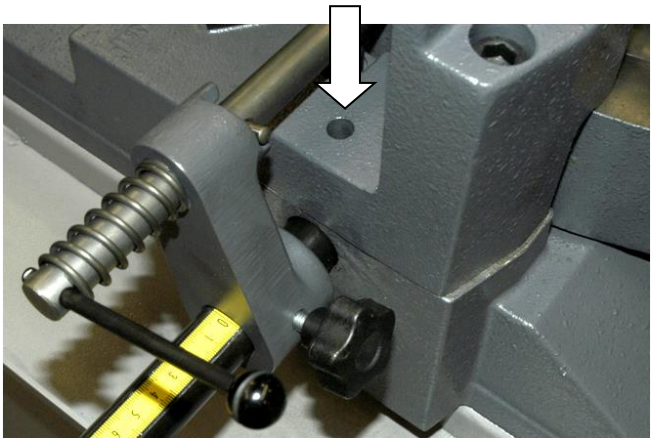

4. Fix the guiding pole of the length stop in place with a screw, which is put into the opening on the top side of the vice.

2.6.2. Attachment of the cooling liquid tub

1. Put the tub for the dripping off of the coolant on the pedestal from the back side of the saw

2. Attach the hose for the coolant removal to the outlet of the tub and put its other and immerse its other end into the coolant tank.

2.6.3. Assembly of the hand wheel

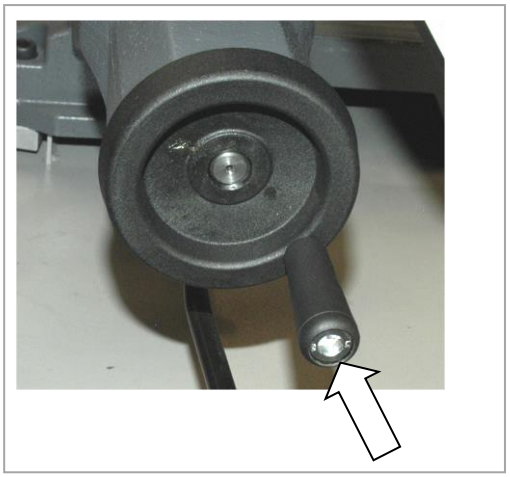

Remove the nut from the handle of the hand wheel, place it into the hex opening on the back side of the wheel and fasten the handle.

2.6.4. Machine installing and leveling

Check the floor supporting capacity before installing the machine. If the floor capacity does not meet the requirements, you must ready the necessary base for the machine.

Minimal requirement:

machine weight – Ergonomic 320.258 DG – 390 kg

+ weight of the accessories

+ maximum weight of material

- The machine must be leveled in a horizontal position. All feet of the machine must touch the floor after leveling.
- The machine must be leveled by means of a calibrated spirit level. Put the spirit level near the vice. Adjust the roller conveyors according to the spirit level.
- For machine leveling, take care that there is sufficient space available for operation, repair work, servicing of the machine and handling of the material.
- The machine and all appended parts and accessories must be visible from the place of operation.

2.6.5. Kotevní plan / Verankerungsplan / Grounding plan

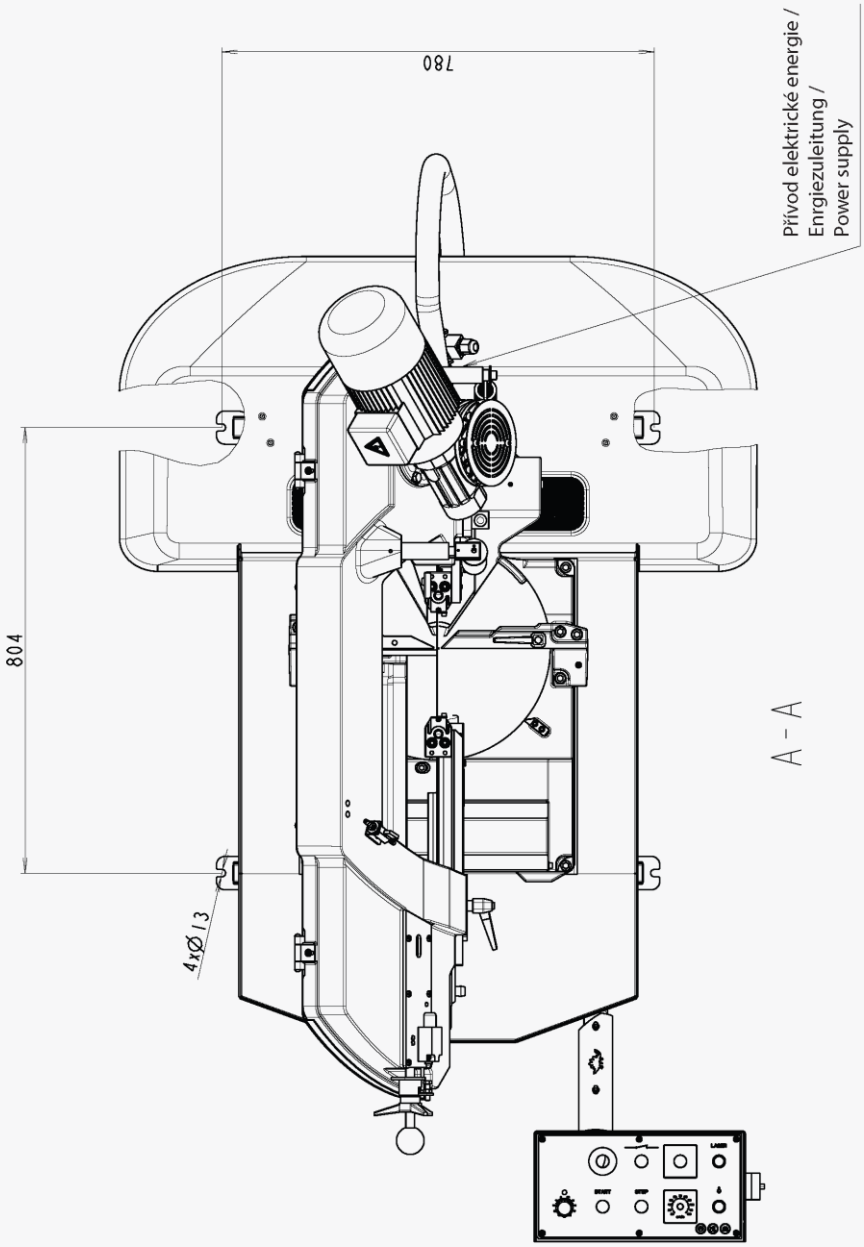

Kotvící materiál / Verankerungsmaterial / Grouding material

- 4× Chemická hmoždina / Chemischer Dübel / Chemical plug – ø12 mm
- Vrtáno do hloubky / In die Tiefe gebohrt / Drilled to – 100 mm
- Šrouby / Schraube / Screws – 4 × M10

Šrouby podložit deskami o min. rozměrech P10×100-100
- Die Schrauben mit Platten mit Minimaldimensionen P10×100-100 unterlegen
Screew must be bottomed with plates (min. dimensions P10×100-100)

Požadavky na rovinnost podlahy / Anforderungen an die Bodenebenheit / Requirements for floor flatness

± 10 mm / 1 m

2.6.6. Electrical connection

Attention!
Only a qualified professional must carry out the servicing and repairs of the electric equipment! *Take special care during work with the electrical equipment. High voltage accident can have fatal consequences! Always follow instructions for work safety.*

Electrical parameters of the machine:

- Service voltage: ~ 3×400 V, 50 Hz, TN-C-S
- Total input / Max. fuse: 1,8 kW / 16 A

Before connecting the machine turn off the main power switch and ensure a dry area for the connection work.

Note:
The values of the cross section of the conductor and the rated current can be found in the regulations.

Service voltage must agree with the line voltage! Cross section of the supply line must respond with the rated current for max. machine load.

Note:
The socket with the fork can be used only for machines with the rated current less than 16 A and total input less than 3 kVA.

The input line is equipped with a 16 A socket for connection of the machine to the electric supply line. In case the machine is connected with a direct connection, an extra main switch which can be locked in zero position must be added.

Attention!
In this case the extra switch becomes the primary switch and the main switch on the machine has only secondary function!

2.6.7. Check the direction of the saw band

After the machine has been successfully connected, switch on the machine and run the driving engine of the band briefly. The movement of the band must be in agreement with the direction of the arrow on the saw band cover. If the direction of the saw band does not agree, the phases at the terminal line must be switched.

2.6.8. Inspection of the connection to the electrical network

Attention!
When you connect the machine to the electrical network insure correct connection of all phases!
THE HYDRAULIC AGGREGATE ENGINE MUST NOT BE OPERATED IN REVERSED MODE FOR MORE THEN 10 SECONDS!!!

2.6.9. Filling of the cooling system

Prepare a mixture of the water and the cooling liquid. Keep to the concentration specified by manufacturer. Remove the cover from the drainage hole. Pour the mixture into the tank of the cooling system.

When filling the tank with the cooling liquid, take care that the liquid does not drip out of the tank and that the tank does not overflow.

When adding anticorrosion agents, antifreeze and other chemicals follow the instructions of the manufacturer! By mixing various products poisonous and aggressive chemicals can be created that can damage your health or the cooling equipment of the machine.

2.7. Machine functions check

Before you start the check study the chapter *Machine control* thoroughly. Do not proceed with the check if you did not fully understand all control elements and machine functions.

Check, if the machine or some parts of the machine were not damaged during transport.

Check, if all covers are installed and functional. Check (with the Tenzomat) if the saw band is correctly stretched. If it is necessary, you can stretch the saw band according to chapter *Selection and replacement of the saw band*. Correct values of the saw band tension are on the Tenzomat.

Switch on the main switch and check the motors and systems (saw band drive, hydraulic pump, cooling pump, chips conveyor).

Open and close the main vice. Turn the saw frame of the band saw from one outer position to the other outer position. Raise the saw frame to the top position and than lower the saw frame to the lowest position.

Start the machine with the cooling pump and let it run without load until the cooling system will be filled with cooling liquid. As soon as the cooling liquid starts to escape from the nozzles of the cooling system, the cooling system is ready for operation. Carry one cycle of cutting without material. Check, if the machine runs with no irregularities. If all machine functions are run properly, the machine is ready for operation.

2.8. Machine disposal after lifetime

Pour all service fluids (cooling liquid, hydraulic oil) from the machine over into designated reservoirs. Dismantle machine into separate parts and dispose of them in accordance with valid directives.

Packaging material Also dispose in accordance with valid directives.

Packaging and machine parts that contain secondary raw materials can be recycled.

2.9. Saw band

Remove the saw band cover only after you have installed and tightened the saw band a bit. This way you minimize the risk of injury.

2.9.1. Saw band size

2910×27(25)×0,90 mm

2.9.2. Selection of the saw band tooth system

The manufacturers provide the saw bands with constant and variable tooth systems. The important factor for selection of the tooth system is the length of the cutting canal with respect to the size of the product.

1. *Constant tooth system* – the saw band has a constant tooth pitch all over its length. This type is suitable for cutting solid materials.

BOMAR recommends variable tooth system for its band saws.

2. *Variable tooth system* – tooth pitch is variable. Variable tooth system is used for profiled materials and bundle cutting. Variable tooth pitch lowers vibration of the saw band, increases service life of the saw band and quality of the cut area.

In the table below the type of the tooth system depending on the sizes and profile of the cutting material is advised.

Footnotes:

Z_pZ – teeth number on one inch S – tooth with zero angle of the teeth K – tooth with positive angle of the teeth

Examples of the tooth system marking:

32 S – number „32" means 32 teeth per inch (constant tooth system), letter „S" marks teeth with zero angle with respect to the band.

4–6 K – number „4–6" means 4 to 6 teeth per inch (variable tooth system); letter „K" marks teeth with positive angle with respect to the band.

2.9.3. Saw band running-in

For reaching a full lifespan of the band we recommend performing a running-in.

Running-in: Perform a cut with the frame lowering speed at 50%. If vibrations occur increase or decrease the band's speed.

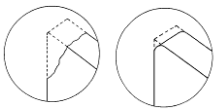

When cutting small pieces run the band until approximately 300 cm² of material has been cut. When cutting large pieces run the band for approximately 15 minutes. When the band has been run, increase the lowering speed of the arm to normal. The running in of the saw band avoids micro chips on the cutting edges of a new saw band ensuing from first excessive stress. This would decrease its lifespan substantially. The optimal running in of the saw band produces ideal rounded cutting edges and therefore the conditions for a maximum lifespan are met.

***Note:** Run-in reground saw bands too.*

2.9.4. Tables for teeth selection

SHAPED MATERIAL (D_p, S = mm)

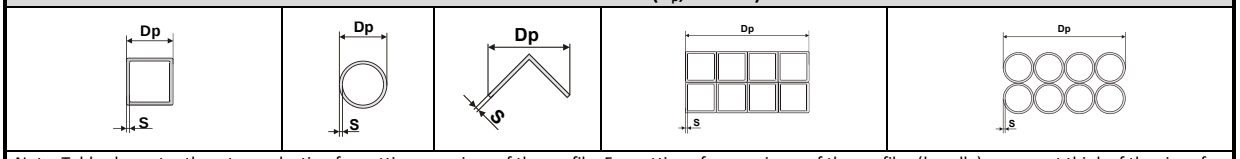

Note: Table shows tooth system selection for cutting one piece of the profile. For cutting of more pieces of the profiles (bundle), you must think of the size of the wall as double size of the wall of one profile (that means, size „S“ equates to 2×S). In table, there are tooth systems constant and variable.

Size of the wall S [mm]	Tooth system (Z_pZ) Outer diameter of the profile D_p [mm]					
	20	40	60	80	100	120
2	32 S	24 S	18 S	18 S	14 S	14 S
3	24 S	18 S	14 S	14 S	10–14 S	10–14 S
4	24 S	14 S	10–14 S	10–14 S	8–12 S	8–12 S
5	18 S	10–14 S	10–14 S	8–12 S	6–10 S	6–10 S
6	18 S	10–14 S	8–12 S	8–12 S	6–10 S	6–10 S
8	14 S	8–12 S	6–10 S	6–10 S	5–8 S	5–8 S
10	-	6–10 S	6–10 S	5–8 S	5–8 S	5–8 S
12	-	6–10 S	5–8 S	5–8 S	4–6 K	4–6 K
15	-	5–8 S	5–8 S	4–6 K	4–6 K	4–6 K
20	-	-	4–6 K	4–6 K	4–6 K	3–4 K
30	-	-	-	3–4 K	3–4 K	3–4 K
50	-	-	-	-	-	3–4 K

Size of the wall S [mm]	Tooth system (Z_pZ) Outer diameter of the profile D_p [mm]					
	150	200	300	500	750	1000
2	10–14 S	10–14 S	8–12 S	6–10 S	5–8 S	5–8 S
3	8–12 S	8–12 S	6–10 S	5–8 S	4–6 K	4–6 K
4	6–10 S	6–10 S	5–8 S	4–6 K	4–6 K	4–6 K
5	6–10 S	5–8 S	4–6 K	4–6 K	4–6 K	3–4 K
6	5–8 S	5–8 S	4–6 K	4–6 K	3–4 K	3–4 K
8	5–8 S	4–6 K	4–6 K	3–4 K	3–4 K	3–4 K
10	4–6 K	4–6 K	4–6 K	3–4 K	3–4 K	2–3 K
12	4–6 K	4–6 K	3–4 K	3–4 K	2–3 K	2–3 K
15	4–6 K	3–4 K	3–4 K	2–3 K	2–3 K	2–3 K
20	3–4 K	3–4 K	2–3 K	2–3 K	2–3 K	2–3 K
30	3–4 K	2–3 K	2–3 K	2–3 K	1,4–2 K	1,4–2 K
50	2–3 K	2–3 K	2–3 K	1,4–2 K	1,4–2 K	1,4–2 K
75	-	2–3 K	1,4–2 K	1,4–2 K	1,4–2 K	0,75–1,25 K
100	-	-	1,4–2 K	0,75–1,25 K	0,75–1,25 K	0,75–1,25 K
150	-	-	-	0,75–1,25 K	0,75–1,25 K	0,75–1,25 K
200	-	-	-	0,75–1,25 K	0,75–1,25 K	0,75–1,25 K

SOLID MATERIAL (D = mm)

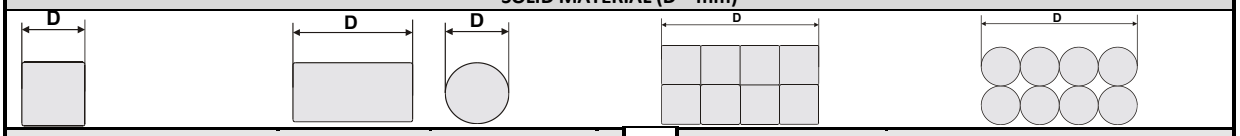

Constant tooth system	
length of the cut D	tooth system (Z_pZ)
to 3 mm	32
to 6 mm	24
to 10 mm	18
to 15 mm	14
15–30 mm	10
30–50 mm	8
50–80 mm	6
80–120 mm	4
120–200 mm	3
200–400 mm	2
300–800 mm	1,25
700–3000 mm	0,75

Variable tooth system	
length of the cut D	tooth system (Z_pZ)
to 30 mm	10 –14
20–50 mm	8–12
25–60 mm	6–10
35–80 mm	5–8
50–100 mm	4–6
70–120 mm	4–5
80–150 mm	3–4
120–350 mm	2–3
250–600 mm	1,4–2
500–3000 mm	0,75–1,25

3. Ovládání stroje / Bedienung der Maschine / Machine control

3.1. Starting the band saw and switching on the safety circuits

» 1. Turn the main switch into position 1 –ON.
The main switch is located on the side of the control panel

2. Switch on the Safety circuit of the saw. The safety circuit will run a check on all safety switches.

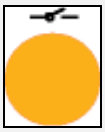

3.2. Control elements

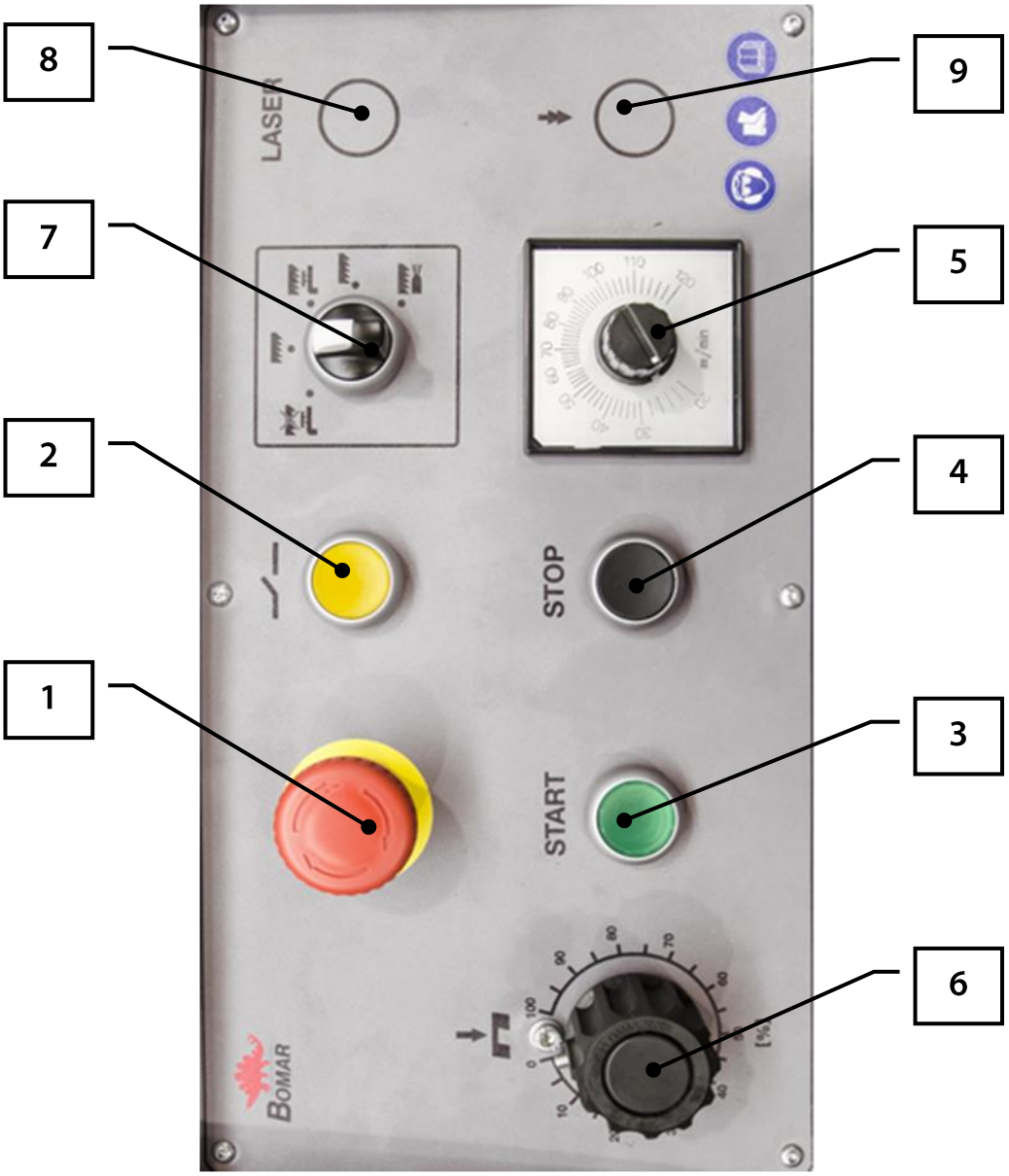

1	**Emergency Stop Switch** Immediately stops the machine in a case of emergency.
2	**Safety circuit** Press button to turn on the safety circuit
3	**START** Starts the drive of the saw band..
4	**STOP** Stops the drive of the saw band
5	**Ergonomic 320.258 DG with a frequency converter** **Frequency converter – setting of the cutting speed** Serves to set the speed of the saw band during cutting with the possibility of the frequency converter (**20** to **120** m. min^{-1}).
6	**Regulation valve** The regulation valve sets the speed of the descent of the saw arm into the cut. The speed is limited by the setup of the pressure into the cut on the guiding cubes. **Note:** If the throttle valve is tightened too much when being closed, the valve seat can be worn out, which will cause leakage. Always tighten the valve gently.
7	**Setting of the cooling mode of the saw band** By turning the knob into the corresponding position the required cooling mode is set. See chapter regarding the setting of the cooling mode
8	**Laserliner – optional equipment** Laser beam switch
9	**Rapid shift – optional equipment** The rapid shift allows a faster descent of the arm into the cut than the maximum speed of descent reached with the hydraulic regulation. For acceleration of descent of the arm into the cut press the rapid shift button.

3.3. Machine control

3.3.1. Cutting

1. Open the main vice of the band saw.
2. Set the length stop to the desired length of the material.
3. Set the desired cutting angle.
4. Insert the material and push it to the length stop.
5. Move the vice jaw to about 5 mm from the material

For a longer distance movement of the vice jaw use the rapid shift option:

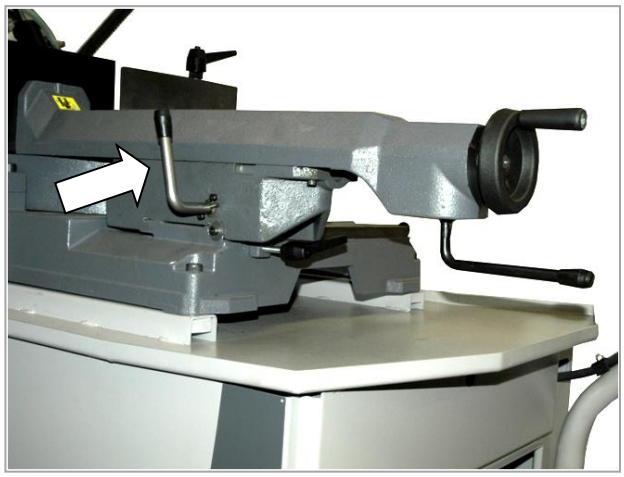

a) loosen the arresting lever of the moveable jaw of the main vice

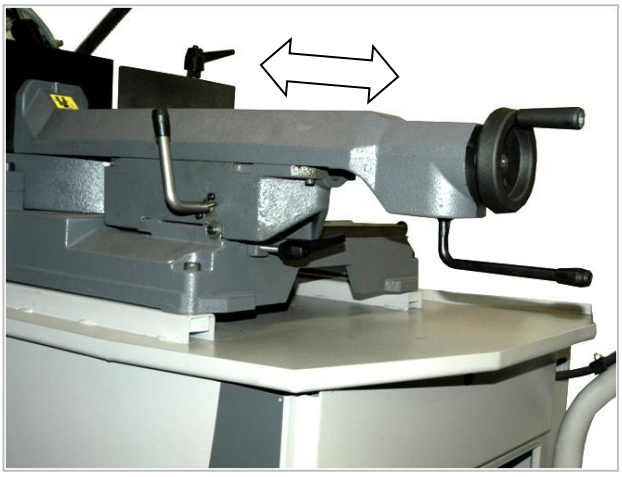

b) move the jaw to the required distance

c) tighten the arresting lever

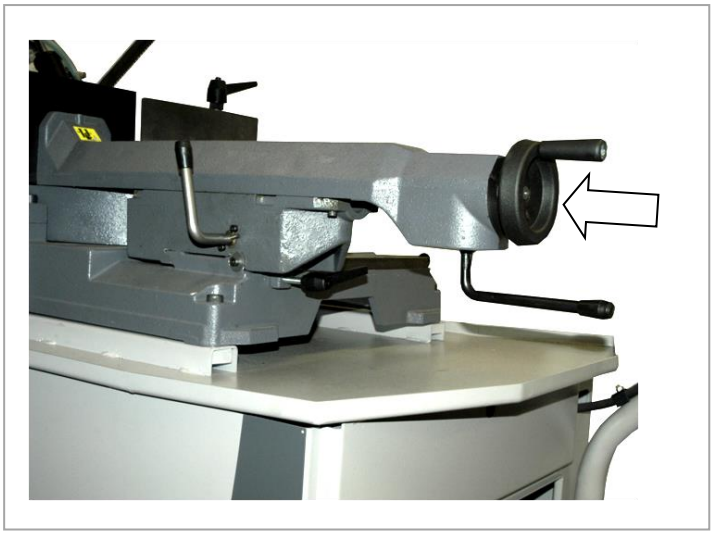

For shifting the jaw for a shorter distance use the hand wheel.

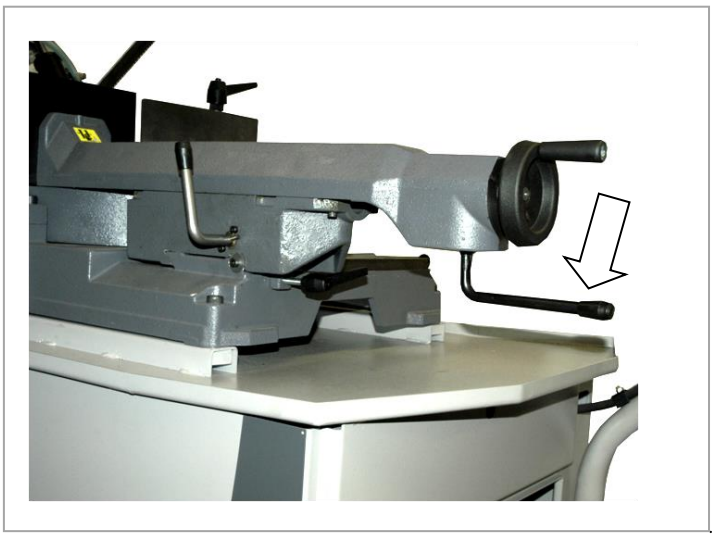

6. Tighten the material by the clamping lever.
7. Set the left guiding cube of the saw band as close as possible to the material.

Note:
It is possible to stop the saw band drive by pressing the STOP button or in a case emergency with the Emergency Stop Switch anytime during the cutting

8. Set the saw band speed.
9. Start saw band drive with the **START** button.
10. Set the speed of the saw frame descent.
11. Close the regulation valve of the frame descent and lift the saw frame to the top position after cutting
12. Remove the material. Now you can repeat the whole process.

3.3.2. Setting of the material length

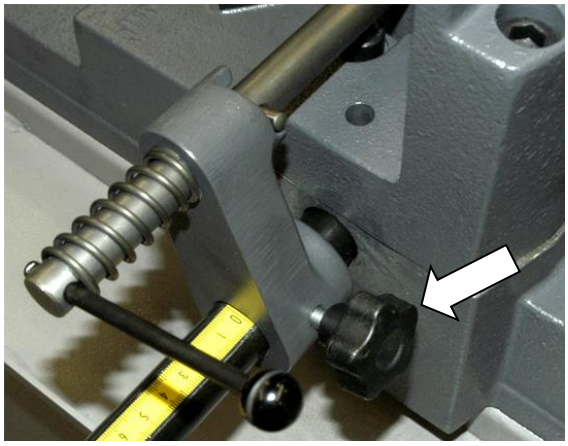

1. Loosen the clamping screw of the length stop

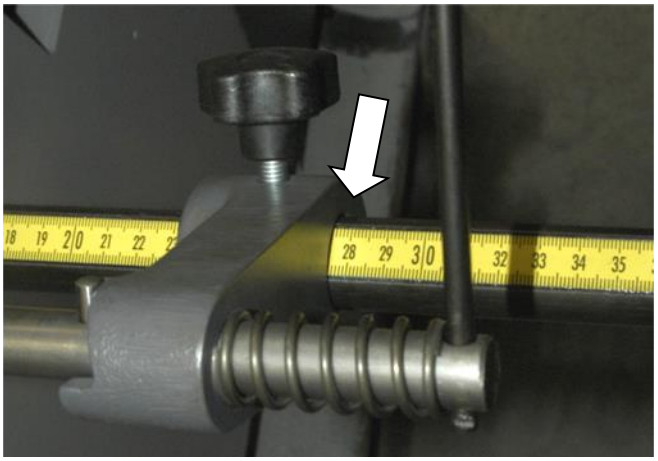

2. Shift the length stop to the required length and tighten the clamping screw.

Warning!
The length stop enables a gap between the length stop slat line and the material to avoid clenching the saw band in the cut during cutting. Set the gap of the length stop by turning the lever in the direction of the arrow.

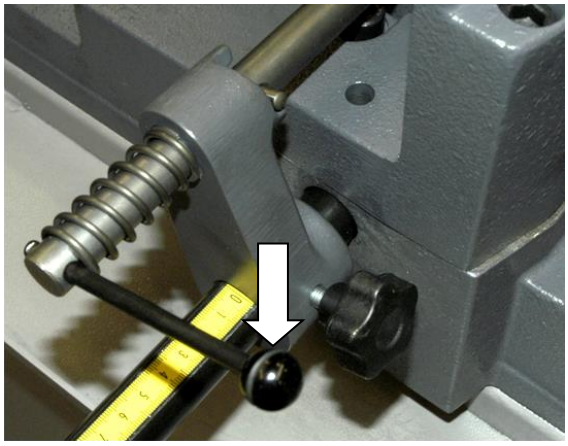

3.3.3. Setting of the cutting angle

The band saw **Ergonomic 320.258 DG** allows cutting under angles from **-45°** to **60°**. For an easier setup of common angles, there are latches on the turning console at every 15° angle increment. Locking in the latches can be felt when turning the saw frame by hand. It is not necessary to loosen the latches for setting a different angle, just turn the saw frame console in the direction required.

Picture	Procedure
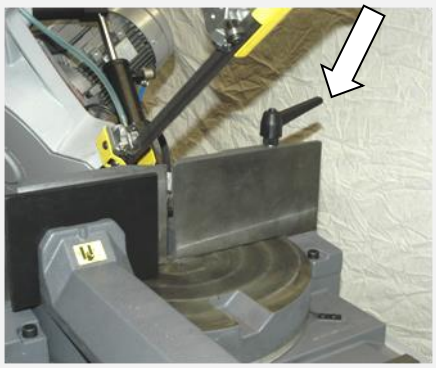	1. Raise the saw frame and loosen the turning console clamping lever.
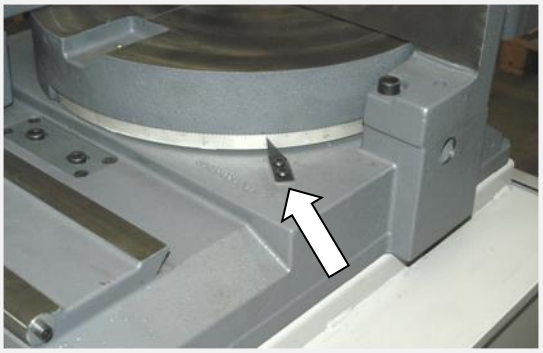	2. Set the required angle of the cut according to the scale on the turning console.
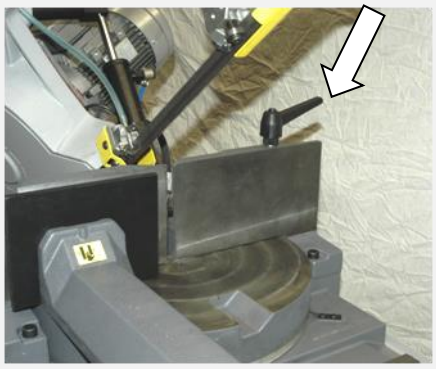	3. Tighten the clamping lever of the console.

Picture	Procedure
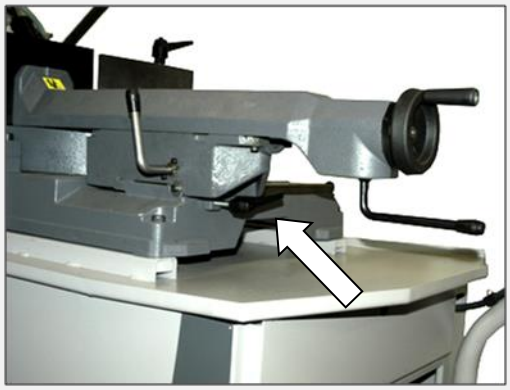	
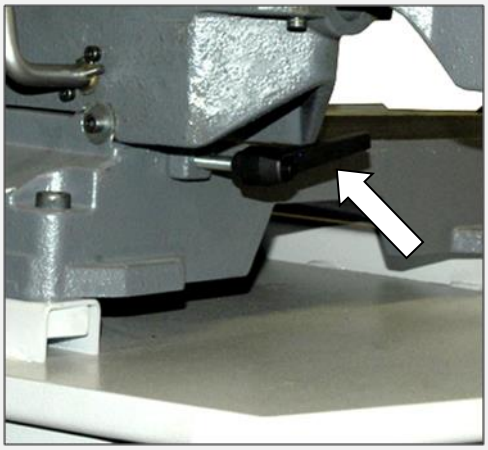	4. Loosen the clamping lever of the vice.

Picture	Procedure
angle < 0° **angle ≥ 0°** 	5. Shift the vice according to the set angle of the cut. For negative angles move the vice to the right, for positive and zero angles to the left.

3.3.4. Setting of the optimal span of the guiding cubes

For reaching a smooth and accurate cut it is necessary to move the left guiding cube as close to the cut material as possible.

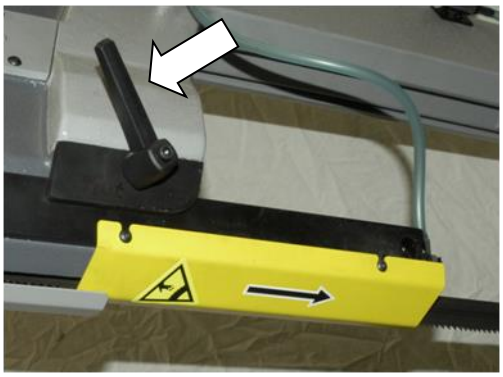

1. Loosen the lever of the left guiding lath and move the left part of the saw band guide so that the edge of the left guiding cube will be as close to the material as possible.
2. Lower the arm into the lower position and check, the position of the guiding cube in respect to the loading surface. The guiding cube should be positioned aprox.10 mm from the loading surface of the vice.
3. Tighten the lever of the guiding lath and check the setting of the guiding cube one more time to avoid collision with the vice jaw or clamping table.

3.3.5. Cutting speed adjustment

Picture	Description
Ergonomic 320.258 DG with freq. Converter	• Change band saw speed by frequency converter in range 20–120 m.min^{-1}.

3.3.6. Speed adjustment of the arm lowering

Set the speed of the arm lowering to the cut by this regulation knob on the control panel (no.6)

- turn clockwise to lower the speed of the descent
- turn counter clockwise to increase the speed of the descent

Warning!
If the throttle valve is tightened too much when being closed, the valve seat can be worn out, which will cause leakage. Always tighten the valve gently

Note

If the regulation valve is fully closed, the arm is fixed in a vertical position.

To allow the arm to move downwards (into cut) it is necessary to release the valve.

3.3.7. Setting the type of cooling

The required type of cooling can be chosen using knob no. 3 o the control panel.

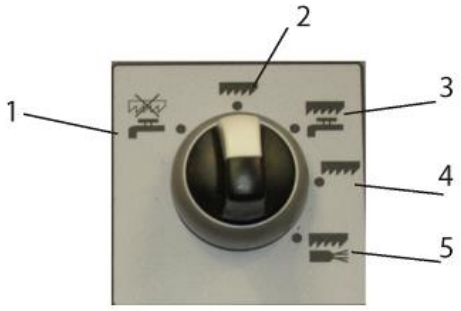

Cooling with liquid:

1. The cooling pump runs, even if the pump is turned off (washing)
2. The saw band runs without cooling.
3. The cooling is turned on together with the saw band drive

Cooling with oil vapor- Microniser (optional equipment)

4. Saw band runs without cooling.
5. Cooling is turned on together with the saw band drive.

3.4. Material insertion

- Never walk under a suspended load!
- Never climb onto the-roller conveyor!
- Do not hold the material for clamping in the vice! The vice can cause injuries!

3.4.1. Selecting means of manipulation

- Use the sufficient means to lift and transfer the material!
- Handle the material only with a lift truck or use suspension strands and a crane!
- Do not use the lift truck or crane in case that you do not have the license to operate it!

3.4.2. Insertion

Insert material into the vice and ensure that the material cannot move in the vice or fall from the vice after the clamping. If you are cutting long pieces (for example rods, tubes), you must use a roller conveyor for shifting the material to the band saw. Contact Bomar for more information about roller conveyors.

Make sure the conveyor is long enough and the material cannot drop off the conveyor.

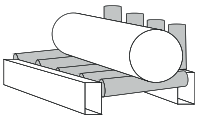

Make sure round pieces always stay on two vertical rollers and cannot fall off the conveyor!

3.4.3. Bundle material cutting

If you want to cut the material in bundles, it is suggested to load the material in the following way.

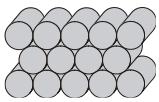

Round material bundle: For round material take care that the bars are put according to the picture. If the bars are put differently, they might slide during handling.

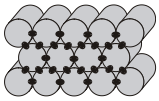

It is recommended to always weld the material at the rear end of the bundle to secure it from moving. Before welding always, switch the machine off with the main switch! The magnetic fields, which occur during welding, may damage the controls!

4. Údržba stroje / Wartung / Machine service

4.1. Saw band dismantling

1. Lift the arm to its uppermost position and lock the arm in position with the regulation valve.

2. Remove the yellow safety covers of the band. The covers are tightened with screws.

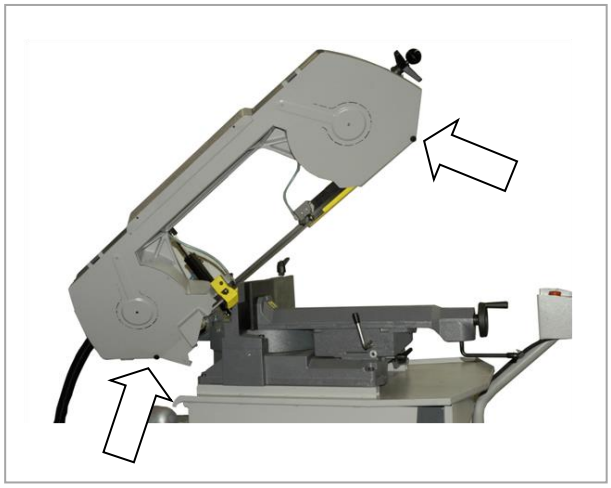

3. Open the back cover of the arm. It is mounted with two plastic head screws.

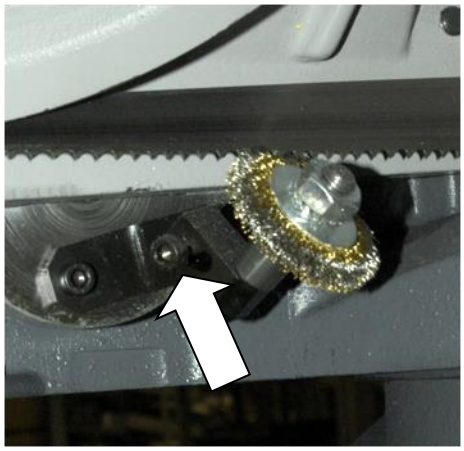

4. Loosen the holder of the brush and turn it away from the band so it does not hinder the dismantling of the band.

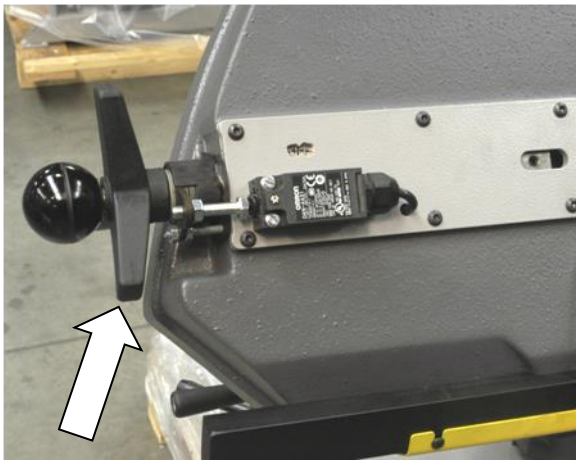

5. By turning the tightening star to the left loosen the stretching of the band.

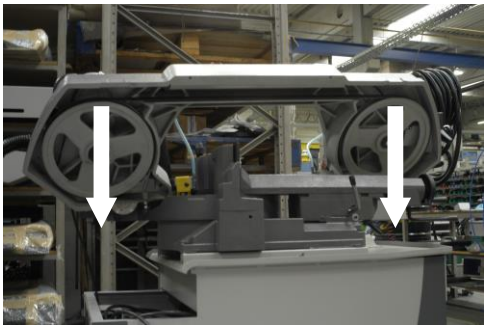

6. Pull the saw band from the wheels.

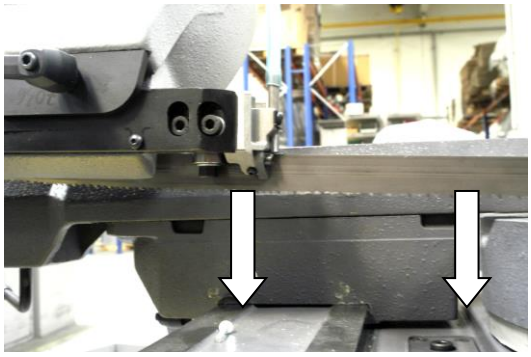

7. After that pull out the band carefully from the guiding cubes.

4.2. Saw band installation

1. Prior to installation, clean the track wheels, guiding cubes and inner side of the arm thoroughly of all traces of chips and dirt. ***Keep in mind the teeth direction when installing the saw band***.

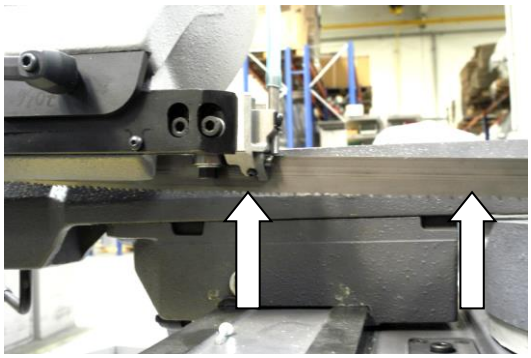

2. Insert a new saw band in the guide cubes. Make sure the saw band runs between both guiding rollers and that it is pushed all the way to the top.

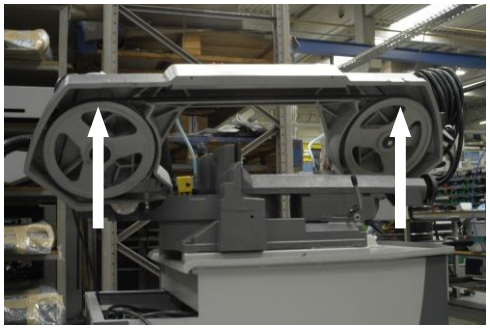

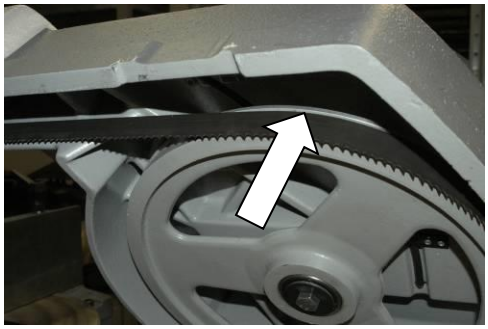

3. Put the saw band on both guiding wheels. Make sure that the saw band ridge fits tightly to the wheel rim. Push the saw band as close to the rim as possible..

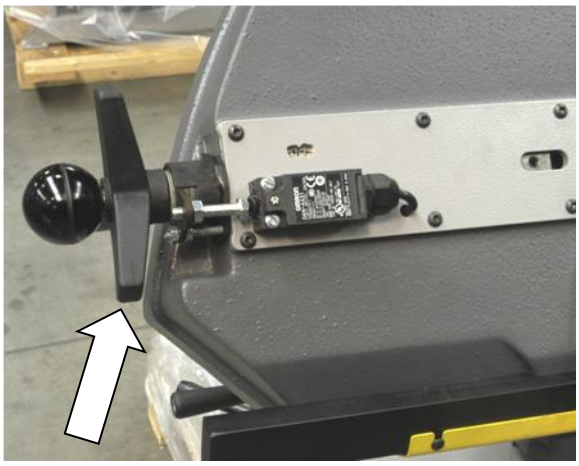

4. Turn the tightening star to the right until you gently stretch the band. Now you can remove the plastic cover on the saw band.

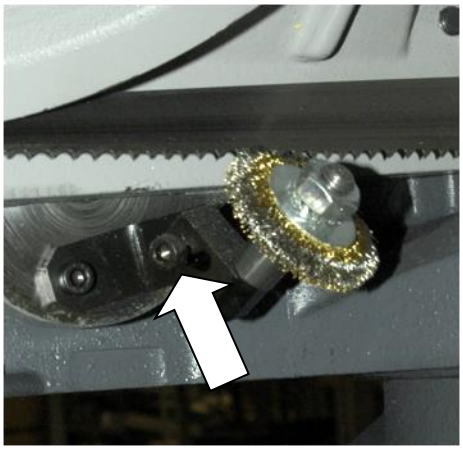

5. Adjust the brush to the saw band and tighten the holder screws.

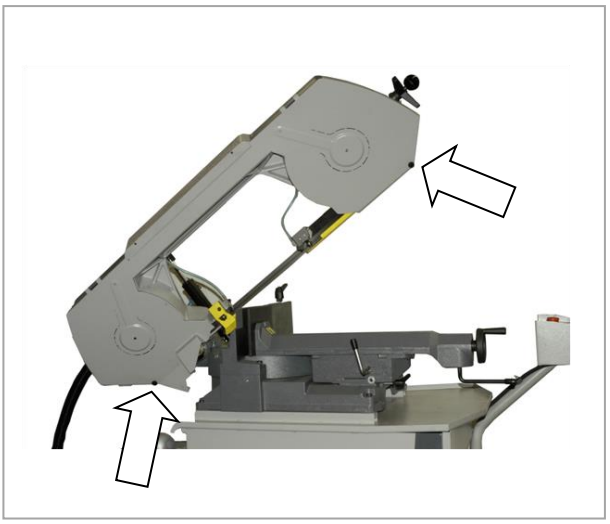

6. Close the back cover and secure it with two plastic head screws.

7. Mount the yellow safety covers of the band.

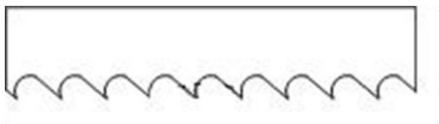

Arrow on the cover must agree with the direction of the teeth. If it does not, you have to flip the saw band.

4.3. Saw band stretching and inspection

Correct saw band stretching is one of the most important factors, which influences accuracy and saw band lifespan. Stretch the saw bands according to the band saw and the selected saw band type. Keep to the recommendation of your manufacturer.

Pilový pás Sägeband Saw band	Napětí pilového pásu Sägebandspannung Blade tension	Napětí pilového pásu PSI (pro Tenzomat) Sägebandspannung PSI (für Tenzomat) Blade tension PSI (for Tenzomat)
20 x 0,9 mm	160 $N.mm^{-2}$	23 500
27 x 0,9 mm	180 $N.mm^{-2}$	26 500
34 x 1,1 mm	210 $N.mm^{-2}$	30 500
41 x 1,3 mm	240 $N.mm^{-2}$	35 000
54 x 1,3 mm	240 $N.mm^{-2}$	35 000
54 x 1,6 mm	280 $N.mm^{-2}$	40 600
67 x 1,6 mm	290 $N.mm^{-2}$	42 000
80 x 1,6 mm	300 $N.mm^{-2}$	43 500

4.3.1. Saw band stretching

1. After installation of the saw band stretch it gently, so it does not fall of the wheels.

2. Mount the Tenzomat on the saw band and secure it with screws.
3. Stretch the saw band until it is stretched to the recommended value.

For a quick control of the tension of the band there is an indicator near the tightening star. If the indicator agrees with the picture bellow, the band is stretched correctly.

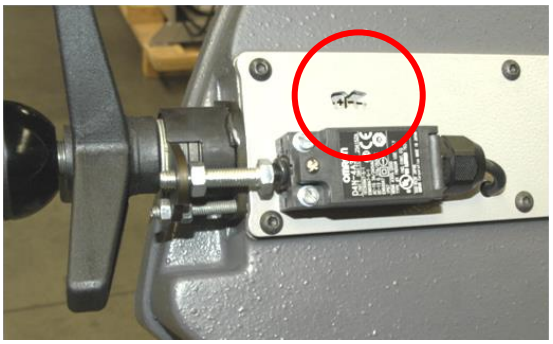

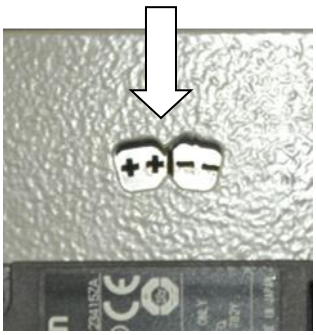

4.3.2. Saw band inspection

If the band does not run correctly, following problems can appear:

- The band falls down from the wheels – the band or the protective cover of the band can be damaged.
- The band runs on the rim of the stretching wheel – the band or the rim of the wheel can be damaged.

1. Switch on briefly the saw band drive and then switch it off
2. Disconnect the saw from the electrical network.
3. Open cover of the wheels and check the position of the saw band on the both wheels.

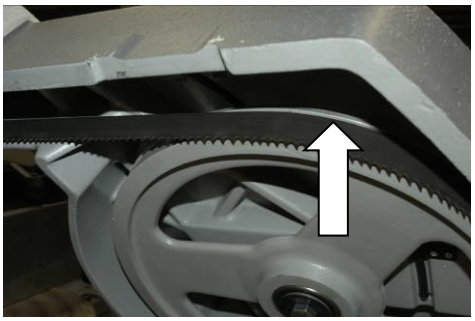

- If the distance between backside of the saw band and the wheel rim is **1 mm**, the setting is right.

- If the distance is bigger than **1 mm**, or the saw band runs on the rim of the wheel, adjust the saw band.

4. Close cover of the saw band.

4.4. Adjustment

4.4.1. Saw band run adjustment

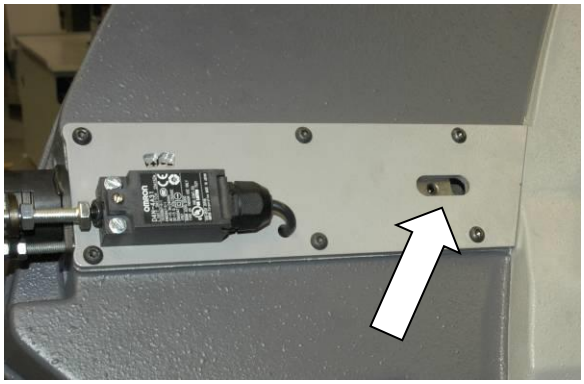

The saw band run is set with screw in the stretching cube on the saw frame. Optimal distance has been determined at **1mm**

- Turn the screw to the right, the saw band closes to the stretching wheel rim
- Turn by screw to the left, the saw band departs from the stretching wheel rim

After setting check the saw band run again.

4.4.2. Hard metal guides adjustment on the machine

Hard metal guides adjustment is one of the most important criterions which influence cutting accuracy and saw band lifespan. Therefore it is essential to check that the adjustment of the hard metal guides is correct

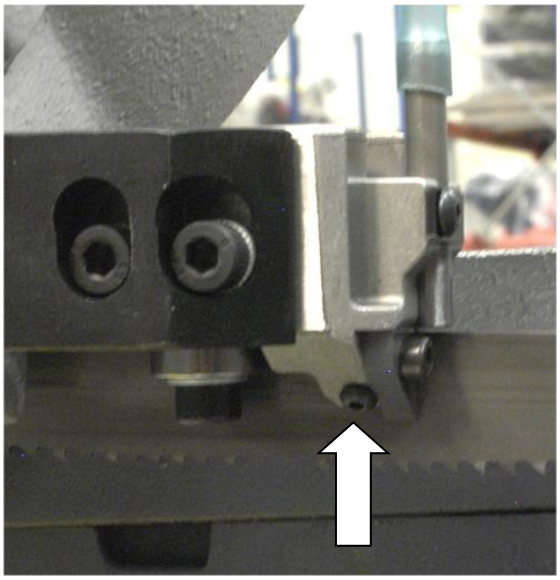

1. Tighten the screw on the side of guide cube so that the band is loosened
2. Loosen the screw slowly and let the hard metal plate touch the band. You must be able to turn the screw by hand. Set the hard metal guiding on the right cube in the same way.
3. **Make sure that the hard metal guides do not put up to much resistance otherwise the lifetime of the saw band and drive decreases.**

4.4.3. Guide cube adjustment

Cutting quality and saw band life is also dependent on guide cubes adjustment

Therefore this adjustment has to be checked periodically

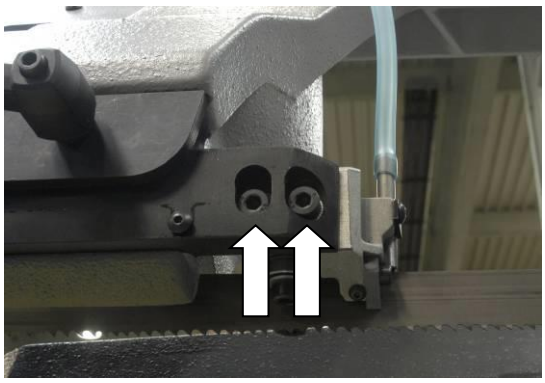

1. Loosen both mounting screws on the guide cubes and push it carefully to the band. Make sure the saw band is not bent; otherwise the cube will press against the band and damage it
2. Fasten both tightening screws again

Notice:
If the guide cube is correctly adjusted, the upper edge of the cube and the ruler are parallel.

4.4.4. Brush adjustment

The brush has essential influence on cutting performance, saw band lifetime, lifetime of the wheels and hard metal guides and cutting accuracy. Therefore the brush has to be checked every shift.

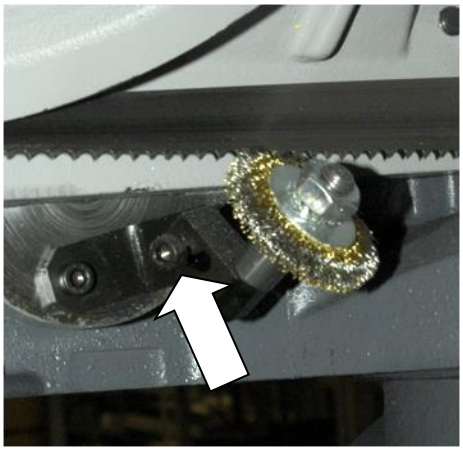

1. Release the tightening screw of the brush so that it is possible to move the brush.

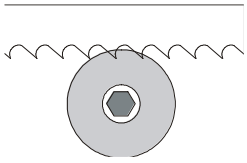

2. Adjust the brush to the saw band. **Its ends must not reach the saw band teeth bottoms.**

3. Tighten the screw again and turn on the band driver. If the chip removing brush is correctly fastened the brush turns smoothly with the saw band.

> ***Attentionr!***
> *Do not tighten the screw with brute force!*

4.4.5. Adjusting the limit switch of the saw band stretching

After the saw band is replaced, the limit switch setting must be checked. If the limit switch is not set correctly, the band is stretched either too much or too little.

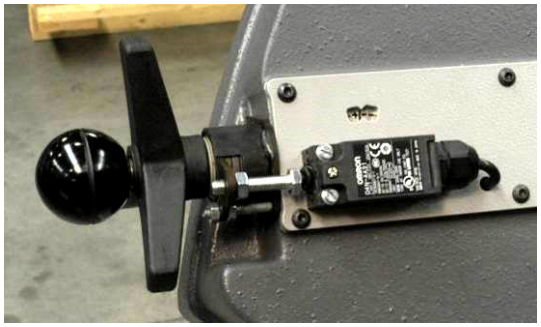

1. Stretch the band with help of the TENZOMAT to an optimal value (Tenzomat chart)
2. Release the nut on the stop screw
3. Start the band drive. Two scenarios may occur:
   a) If the engine is switched on, but it does not run, turn the screw to the left until the engine starts to run
   b) If the engine runs turn the screw to the right until it stops, then turn the screw shortly to the left until the engine starts running again
4. Lock the stop screw using locking nut and check the adjusting of the limit switch again

4.4.6. Saw frame lower position stop adjustment

The lower stop limits the lowest position of the saw frame. This stop has to be checked at least once a month. If the lower stop is adjusted incorrectly, the loading surface of the table can be cut too deeply or the material will not be cut completely

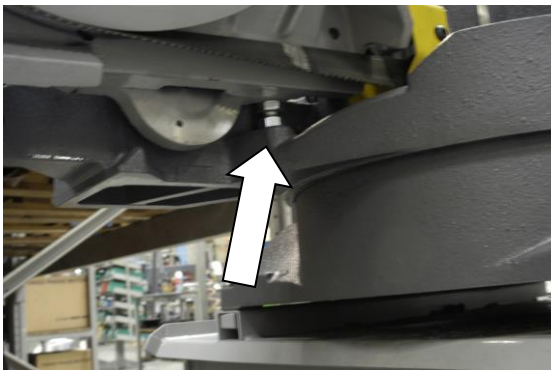

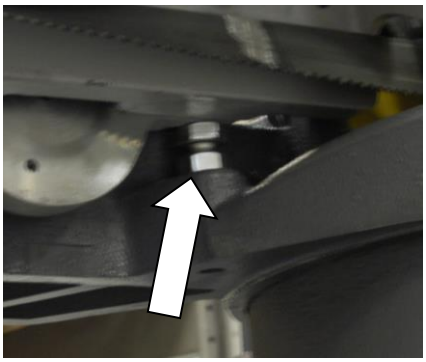

1. Raise the saw frame to the upper position
2. Release the nut of the adjusting screw and adjust the stop
3. Fasten the adjusting screw with the nut again
4. Set the limit switch of the lower arm position

4.4.7. Adjustment of the limit switch of saw frame lower stop

If you have adjusted the lower stop of the saw frame, the limit switch adjustment inspection is required

Setting check

Lower the arm to the lowest position. If the arm lays on the lower stop and the switch reacts, the setting is correct. In other case carry out the switch setting

Switch setting

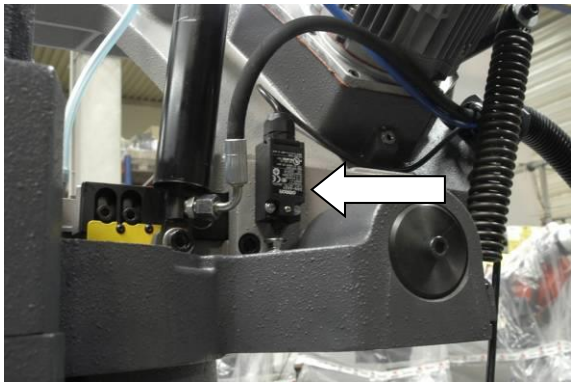

1. Release the nut of the stop screw and screw down the stop screw
2. Lower the arm to the lower stop and turn on the band driver
3. Screw out the stop screw until the band driver stops
4. Secure the screw with nut again and check the limit switch setting once more

4.5. Cooling agents and chip disposal

The quality of the cooling agent will deteriorate due to:	If the solution is too weak:	If the solution is too strong:
• use of contaminated water • impurities • oil contamination from the outside (hydraulics, gears) • high operating temperatures • lack of air circulation • wrong concentration	• corrosion protection is diminished • lubrication decreases • microbial attack is more likely	• the cooling ability is decreased • foam production increases • emulsions stability deteriorates • sticky residue develops

4.5.1. Coolant inspection

The state of the cooling agent has a significant influence on the cutting quality and on the lifespan of the machine. Lifetime of the cooling liquid is 1 year, after this time we recommend change the cooling liquid. This time is dependent on the degree of pollution of the cooling liquid (especially with oils) and on other factors.

Check level of the cooling liquid and function of the pump periodically!

> ***Note:***
> *If the state of the cooling liquid is not satisfactory, the cooling liquid must be replaced.*

Check the state of the cooling agent according to the following table:

Testing	Interval	Method	Condition	Precaution
Liquid level	daily	visually	too low	check concentration, add water or emulsion
Concentration	daily	refractometer densimeter	too high too low	refill water refill base emulsion
Smell	daily	by sense of smell	unpleasant smell	good ventilation, add biocides or replace coolant
Contamination	daily	by sense of smell	visible oil leaks, sludge fungi	surface cleaning, fix leaks, add biocides or fungicides; clean the system with a cleanser* prior to the coolant replacement
Corrosion-protection	when necessary	visually chip test Herbert-test	insufficient corrosion protection	test stability, if necessary – increase concentration or pH value
Stability	when necessary	refractometer	oiling	add concentrate, enquire the supplier
Foam reaction	when necessary	shaking test	too much foam, foam disperses too slowly	avoid aeration, increase water hardness, fix with defomer

* According to manufacturer's instructions

4.5.2. Cooling liquid preparation

Prepare a mixture of water and cooling liquid. Conform the notes of the manufacturer and keep the manufacturer's-approved concentration

All instructions are stated on the tank of the cooling liquid or in documentation of the cooling liquid. For cooling liquid usage and disposal heed the instructions of the manufacturer.

Fill the mixture of water and cooling liquid to the tank of the cooling system

When filling the tank with the cooling liquid take care that the liquid will not drip out of the tank and the tank does not overflow

Keep to the manufacturer specified recommendations for adding the anticorrosive agents, the antifreeze or other agents! Mixing two chemicals can produce toxic and aggressive substances, which can damage your health or the cooling system of the machine

Note: If the machine is equipped with Microniser (see. **Special accessory**), fill the tank of the Microniser with specified cooling liquid. Then the microniser is ready for the operation

The quality of the cooling agent will deteriorate due to:

- use of contaminated water
- impurities
- outside oil contamination (hydraulics, gears)
- high operating temperatures
- lack of air circulation
- wrong concentration

If the solution is too weak:

- corrosion protection is diminished
- lubrication decreases
- microbial attack is more likely

If the solution is too strong:

- the cooling ability is decreased
- foam behavior increases
- emulsions stability deteriorates
- sticky residue develops

4.5.3. Chips disposal

Chips resulting from cutting operations must be disposed of in accordance with the relevant regulations.

- Let the chips drip excess fluid!
- Put the chips into a watertight container. Make sure that the container does not leak, because even after a long dripping time, the chips still contain coolant residues.
- *Place the container into the care of a disposal company equipped for the disposal of chips contaminated with cooling liquid.* In case the machine is equipped with micronisation device, the chips must also be handed over to a disposal company.

4.6. Gearbox oils and greases

4.6.1. Gearbox oils

In gearboxes, oil is used for the whole lifetime of the gearbox. We recommend replacing of the filling oil in case of repair.

Use oils with DIN 51517 specification for the gearboxes. Select the ISO VG viscosity class according to the original oil.

Attention:
When replacing the oil, use oils recommended by BOMAR or oils from other manufacturers, which have comparable parameters. Do not forget, that mineral and synthetic oils must not be mixed!

Recommended oils and quantity according to the type of the band saw

Band saw	Gearbox oil	Capacity
Ergonomic 320.258 DG	Paramo PP7	2,0 l
Swarf conveyor	Shell Tivela S 320	0,075 l

Comparative table of the gearbox oils

Manufacturer	Viscosity grade		
	ISO VG 100	ISO VG 220	ISO VG 320
BP	Energol GR-XP 100	Energol GR-XP 220	Energol GR-XP 320
Castrol	Alpha SP 100 Alpha MW 100	Alpha SP 220 Alpha MW 220	
Elf	Reductelf SP 100	Reductelf SP 220 Reductelf Synthese 220	Reductelf SP 320
Esso	Spartan EP 100	Spartan EP 220	Spartan EP 320
Mobil	Mobilgear 627	Mobilgear SHC 220 Mobilgear 630	Mobilgear 632
ÖMV		PG 220	
Paramo	PP 7	Paramo CLP 220	Paramo CLP 320
Shell	Shell Omala 100	Shell Omala 220 Shell Tivela S 220	Shell Omala 320 Shell Tivela S 320
Total	Carter EP 100	Carter EP 220	Carter EP 320

4.6.2. Lubrication greases

For lubrication we recommend using lithium based class NGLI-2 saponified grease. Different greases are mixable, if their oil bases and density classes are identical.

Comparative table of the lubricant greases:

Manufacturer	Type of the lubricant grease
BP	Energrease LS - EP
DEA	Paragon EP1
Esso	FETT EGL 3144
	Beacon EP 1
	Beacon EP 2
FINA	FINA LICAL M12
Klüber	Microlube GB0
	Staburags NBU8EP
	Isoflex Spezial
Optimol	Optimol Longtime PD 0, PD1, PD2
Shell Aseol AG	ASEOL Litea EP 806-077
Texaco	Multifak EP1

4.6.3. Lubrication

There are several assemblies on the machine,that have to be lubricated to ensure the correct function of the machine.

Place for lubrication	Description
	The upper pivot of the lifting cylinder – drip oil once a week.

4.6.4. Hydraulic oils

Replace the hydraulic oil once every 2 years, because the oil properties can deteriorate and cause problems with the hydraulic equipment. If the hydraulic system is equipped with filter (2SF 56/48-0,063), replace the filter too.

Use oils with specification DIN 51524-HLP, ISO 6743-4 and viscosity class ISO VG 32 in hydraulic aggregates. Hydraulic oils quantity – see chapter Hydraulic oil level check.

Note:
When replacing the oil, use oils recommended by BOMAR or oils, from other manufacturers which have comparable parameters. Do not forget, that mineral and synthetic oils must not be mixed!

Comparative table of the hydraulic oils:

Manufacturer	Type	Manufacturer	Type
Agip	Oso 32	Ina	Hidraol 32 HD
Aral	Vitam GF 32	Klüber	Lamora HLP 32
Avia	Avilub RSL 32	Hungary	Hidrokomol P 32
Benzina	OH-HM 32	Mobil	Mobil DTE 25
BP	Energol HLP 32	ÖMV	HLP 32
Bulgaria	MX-M/32	Poland	Hydrol 30
Castrol	Hyspin AWS 32	Rumania	H 32 EP
Čepro	Mogul HM 32	Russia	IGP 30
DEA	Astron HLP 4hy6	Shell	Tellus Oil 32
Elf	Elfolna 32	Sun	Sunvis 846 WR
Esso	Nuto H 32	Texaco	Rando HD B 32
Fam	HD 5040	Valvoline	Ultramax AW 32
Fina	Hydran 32		

4.7. Machine cleaning

Clean the machine off cooling agent and impurities after every shift. Conserve the guiding surfaces, mainly.

- Guiding of the clamping jaws of the main and feeder vice.
- Guiding of the feeder.
- The loading surface of the main and feeder vice
- Thread rod of the main and feeder vice

4.8. Worn pieces replacement

4.8.1. Hard metal guides replacement

If the hard metal guides cannot be adjusted, they have to be replaced.

1. Remove the cooling agent hosepipe and dismantle the saw band and saw band guiding cube.
2. Fasten the guiding cube in a vice.

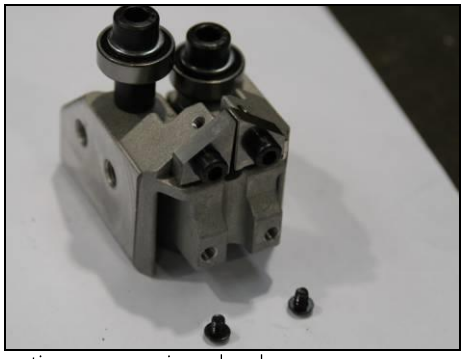

3. Loosen the mounting screws using a hex key

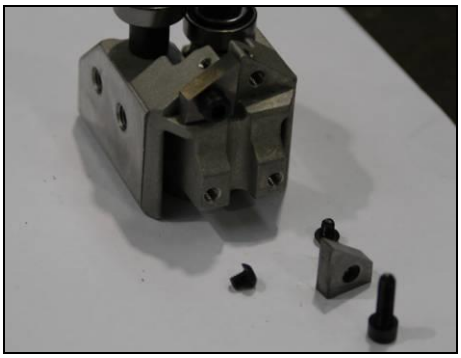

4. Unscrew the frontal screws, which hold the hard metal guides.
5. Now insert new hard metal guides and fasten them tightly and mount the guiding cube to the guiding lath.
6. Install the saw band and adjust guiding cube and hard metal guides.

Attention:
The vice has to have aluminium jaws or an aluminium insert to protect the pivot from damage.

4.8.2. Saw band guiding rollers replacement

If the saw band is not sufficiently guided by guiding rollers and/or if the rollers are visibly worn, they should be replaced.

Attention! Guiding rollers must be replaced together on both guide cubes!

1. Remove the cooling agent hosepipe and dismantle the saw band and guiding cube.

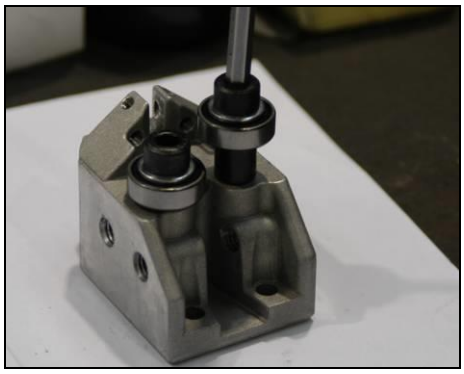

2. Grip the guide cube in a vice and screw out both fastening screws of the eccentrics.

3. Pull both guiding rollers from the eccentrics.

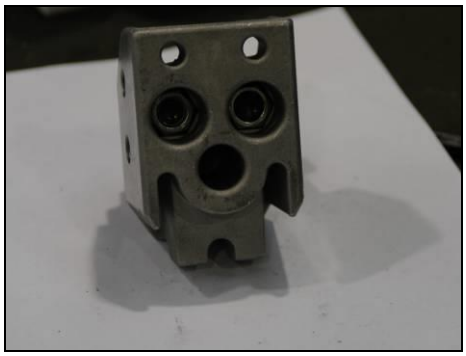

4. Put new guiding rollers on the eccentrics and mount the eccentrics to the guide cube.

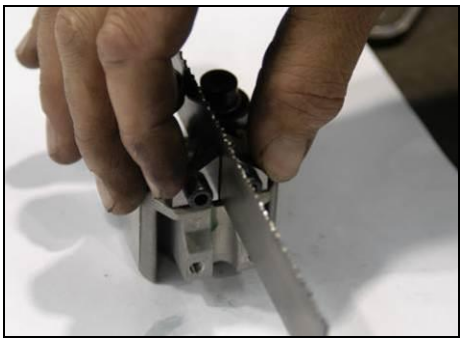

5. Now insert a test piece of saw band (cca 15 - 20 cm) into the guide cube. Adjust both eccentrics so that the band runs in the middle of the milled groove. This groove is located between both eccentrics. Guide rollers may not press too much against the band but spin freely.

Optimal distance between the band and guiding roller is 0,05 mm.

6. Adjust the hard metal guides accordingly for the band to be able to move freely between them. Tighten the frontal screws of the hard metal guides, then tighten the mounting screws.
7. Now it is necessary to tighten the screws band guiding rollers.
8. Install the cube on the lath. Install the saw band and adjust the guiding cubes.

4.8.3. Worn brush replacement

If the chip removing brush is so worn, that it does not fulfill its function, it must be replaced.

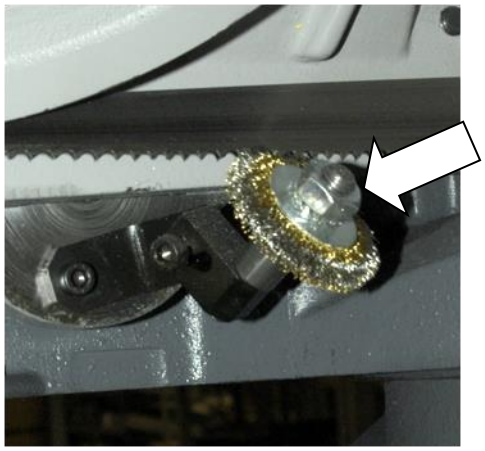

1. Release the nut of the brush, exchange the worn brush for a new one and screw the nut.
2. Set the brush to the saw band.

4.8.4. Stretching wheel replacement

1. Dismantle the saw band.

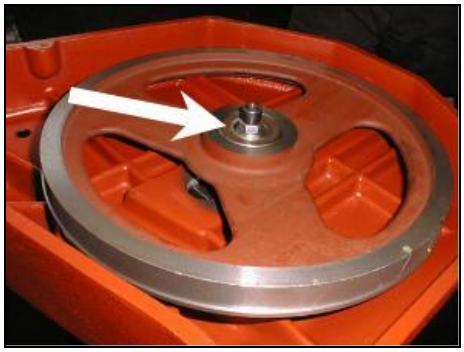

2. Screw off the stretching wheel screw and remove the washer.
3. Screw the auxiliary screw onto the shaft of the stretching wheel.

4. Put on the three-leg puller on the stretching wheel and pull off it from the shaft.

5. If the lower bearing stays on the shaft, pull of it from the shaft with a two-leg puller. Check both bearings; eventually replace them for new ones.

6. Insert the retaining ring into the hole of the new stretching wheel.

7. Insert a bearing into the hole in the wheel and push it to the retaining ring.

8. Clean the shaft and oil it. Install the new stretching wheel on the shaft.

9. Install the distance ring on the shaft and push it to the lower bearing.

10. Install second bearing on the shaft and push it to the distance ring.

11. Install the washer and screw on the stretching wheel.
12. Install the saw band. Wheel replacement is done.

4.8.5. Driving wheel replacement

1. Dismantle the saw band.

2. Screw of the fastening screw of the driving wheel and pull off the washer.
3. Screw on the auxiliary screw to the driving shaft.

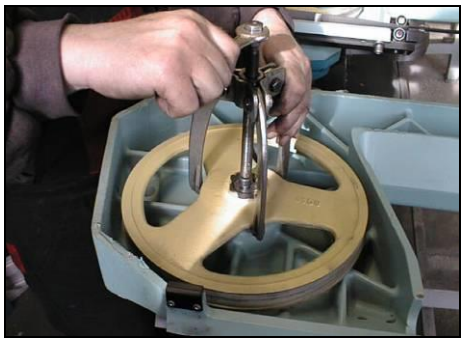

4. Install the three-leg puller on the driving wheel and pull off it from the shaft.

5. Check, if the spring and the driving shaft are not damaged. Contact your supplier for parts replacement.

6. If the shaft and the feather are in good order, clean them, oil them and install them on the driving shaft.

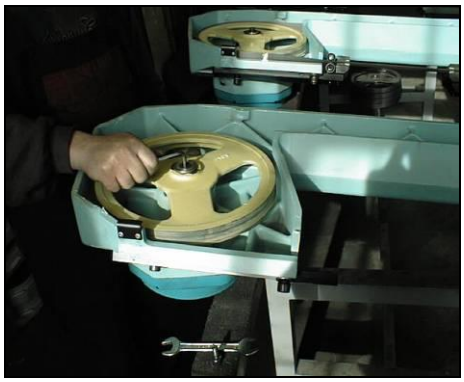

7. Install the washer and screw on the driving wheel.
8. Install the saw band.

4.8.6. Cooling pump replacement

Warning!
Only a qualified technician can perform the installation!
Electrical accidents can be fatal!

1. Disconnect the machine from electrical network.
2. Pull out the tank from the pedestal as far as possible.

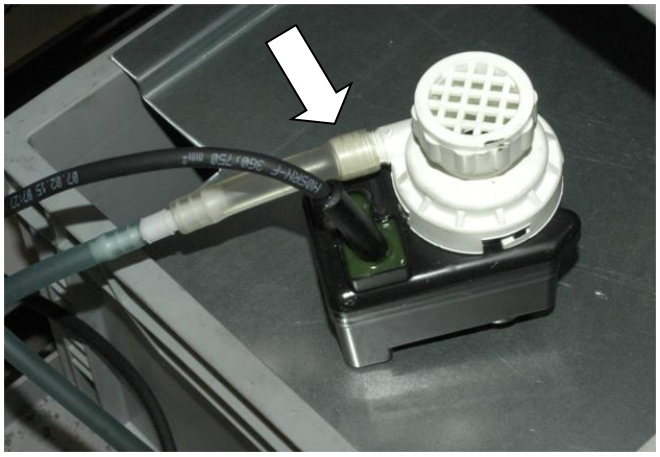

3. Pull out the cooling pump from the tank and disconnect the hose for the coolant distribution from the pump.

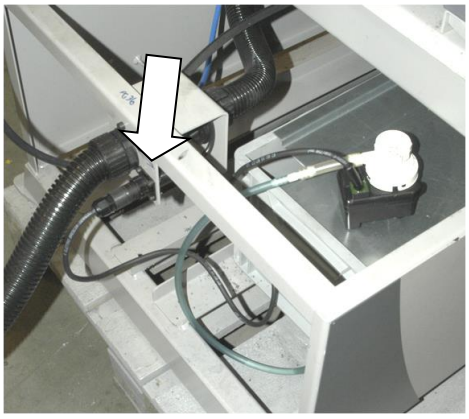

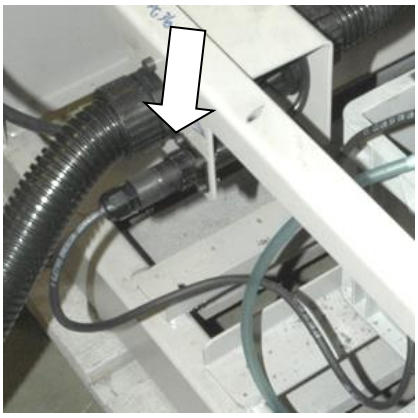

4. Disconnect the supply cable of the pump from the connector.

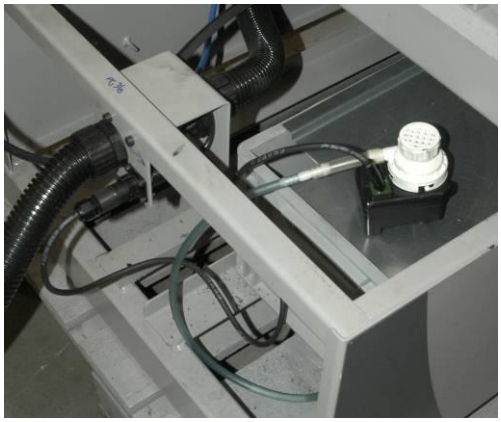

5. Complete the replacement by following these steps in reversed order.

5. Závady / Störungen / Troubleshooting

5.1. Mechanical problems

Problem	Possible causes	Repair
1. Slanting cut	- Wrongly adjusted hard metal guides.	Set according to the chapter „Servicing and adjustment“
	- Worn hard metal guides.	Replace according to the chapter „Worn pieces replacement“
	- Wrongly adjusted cubes of the saw band guiding.	Set according to the chapter „Servicing and adjustment“
	- Worn bearings of the saw band guiding.	Replace according to the chapter „Worn pieces replacement“
	- Wrongly adjusted swarf brush.	Set according to the chapter „Servicing and adjustment“
	- Worn swarf brush.	Replace according to the chapter „Worn pieces replacement“
	- Insufficient saw band stretching.	Increase the saw band stretching and set the limit switch.
	- Wrongly chosen tooth system of the saw band.	Replace the saw band; follow the instructions of the manufacturer for new saw band choice.
	- Worn saw band.	Replace the saw band.
	- Wrongly balanced roller conveyor.	Adjust the roller conveyor.
	- Dirty feeding board.	Cleanse the feeding board from debris, chip and residue material.
	- Guiding rail and guiding cube are loosened.	Tighten the guiding rail.
	- Guiding rail and cube are too far from the material.	Set the guiding cube to the material.
	- Too fast rate of movement into the cut.	Lower the material speed of descent of the arm.
	- Unexpected oscillation in material quality.	Adjust the cutting parameters and feeding speed according to the material.
2. The cut is not cut upon desired angle	- Securing lever is loosened.	Check the securing lever efficiency and carry out its adjustment according to chapter „Servicing and adjustment“.
	- Set angle does not match the cutting angle.	Check the angle adjustment with a protractor and if need be adjust it according to chapter „Servicing and adjustment“.
	- Insufficient saw band stretching.	Stretch the saw band and set the limit switch according to chapter „Servicing and adjustment“.
	- Guiding cube holder and guiding cube are loosened.	Fasten the guiding holder and the cube.
	- Dirt between material and clamping jaw.	Cleanse the material and mating jaw.
3. Short lifetime of the saw band	- Insufficient saw band stretching.	Increase the tightening of the saw band and set the sensor of saw band tightening according to chapter „Servicing and adjustment“.
	- Worn swarf brush.	Check the swarf brush condition and replace it in case of excessive wear as described in chapter „Worn pieces replacement“
	- Wrongly adjusted swarf brush.	Check swarf brush adjustment, set it according to chapter „Servicing and adjustment“
	- Over stretched saw band	Lower the stretching of the saw band and set the limit switch of the saw band stretching according to chapter „Servicing and adjustment“
	- Wrongly adjusted hard metal guides.	Check the adjustment of the hard metal guides and carry out adjustment as described in chapter „Servicing and adjustment“
	- Worn hard metal guides of the saw band.	Check the condition of the hard metal guides and if they are too worn, replace hard metal guides according to chapter „Worn pieces replacement“

Problem	Possible causes	Repair
	- Worn saw band guide bearings.	Check the guiding bearings and if you notice any excessive damage, replace them according to chapter „Worn pieces replacement“
	- Wrongly adjusted guiding cubes of the saw band.	Set the guiding cube according to chapter „Servicing and adjustment“
	- Wrongly adjusted speed of descent of the arm and saw band speed.	Adjust the descending speed and speed of the saw band according to values published by the saw band manufacturer.
	- Different material quality.	Adjust the speed of descent and speed of the saw band according to desired material (perform a test cut).
	- Low quality saw band	Replace the saw band (contact your local accessory supplier for more information)
	- Wrongly chosen saw band tooth system.	Replace the saw band, keep to the instructions of the manufacturer.
	- Wrongly adjusted run of the saw band.	Check the space between the top of the saw band and driving wheel. Adjust the tracking as described in chapter „Servicing and adjustment“ if need be.
4. Insufficient cut output.	- Worn saw band.	Replace the saw band, keep to the instructions of the manufacturer.
	- Wrong saw band tooth system.	Replace the saw band, keep to the instructions of the manufacturer.
	- Wrongly adjusted speed of descent of the arm and saw band speed..	Adjust the descending speed and speed of the saw band according to values published by the saw band manufacturer
5. The cut is not finished.	- Wrongly adjusted lower stop point of the saw frame.	Check lower limit switch and screw.
	- Stop point surface is messy.	Cleanse the stop point surface of the limit switch from debris and residue material.
6. Regulation valve cannot be turned	- Metal chips between the valve and the panel.	Chips must be removed, then put an O-Ring of about 10x2 mm onto the shaft.
	- There are metal chips inside the valve.	Valve must be cleaned or changed.
7. Saw band drive cannot be started.	- Pressure switch is wrongly adjusted.	Set the pressure switch according to chapter „Servicing and adjustment“
	- Pressure switch is defective.	Replace defective parts of the pressure switch.
8. Saw bands tend to rupture.	- Saw band run not adjusted properly	Adjust the distance of band from the rim according to operating instructions.
	- Wrongly adjusted band guiding (hard metal and bearings).	Hard metal pieces and bearings must be adjusted according to „Servicing and adjustment“.
	- Looseness in the lifting cylinder mounting.	
	- Bearings of guiding cubes are worn out (rolling elements are damaged or outside ring of bearing has conical form).	Bearings of guiding cubes must be replaced. Bearings must be adjusted according to operating instructions.
	Worn out pin of the upper or bottom holder of the lifting cylinder.	Exchange the upper or bottom holder of the lifting cylinder.
9. Damage tooth system of the saw band	- Geometry of hard metal guiding cubes is wrongly adjusted.	Hard metal guiding cubes must be adjusted.
	- Bearings of guiding cubes are worn out.	Bearings of guiding cubes must be replaced.
10. The saw is cut downing.	- Grooving on the driving wheel is worn-out.	Driving wheel must be replaced.
11. Cleansing of the saw band is not functional.	- Elastic wheel of the brush drive is worn-out.	Elastic wheel of the brush must be replaced.
	- The shaft of the brush drive is rusted.	The shaft of the brush must be cleaned and oiled.

Problem	Possible causes	Repair
	- The brush position and the brush cover is adjusted incorrectly – the cover prevents the brush from turning.	The brush cover must be repositioned, in order for the brush to be able to turn.
12. The saw arm periodically rises and descends a few millimeters during the cut; this shortens the lifetime of the saw band considerably.	- Backslash in driving wheel mounting on the shaft.	Replace following parts: the driving shaft for a longer one, bearings, distance ring, driving wheel, spring, two covers on the forehead of the shaft + screws.
	- Worn channel for spring.	

5.2. Electrical problems

Problem	Possible causes	Repair
1. Machine is not possible to start.	- No voltage in the socket	Line voltage must be checked.
	- Overload relay is defective (thermal protection)	Each FA overload relay's condition (on/off) must be checked.
	- Limit switch of either saw band stretching, band cover or saw arm is not closed	Check the saw band stretching and covers.
2. When the cut is finished, the frame is not raised.	- Bottom limit switch is adjusted wrongly.	Bottom limit switch must be adjusted according to chapter ADJUSTING.
	- A malfunction in the hydraulic (pneumatic) system. The HYTOS (BOSCH) magnetic valve is not working.	Function of magnetic valve must be checked, valve must be switched on, and voltage across its terminals and coil must be checked.
3. Electric motor and pump are without voltage. There is no voltage between the contactor and thermal protection	- Wrong contactor.	Replace the contactor of the engine.
4. The speed indicator of the saw band is not functional.	- Sensor of speed is not adjusted.	Sensor of speed must be adjusted.
	- Defective display	The display must be replaced.
	- Defective sensor – diode of indicator speed does not light.	Sensor must be changed and adjusted.
5. Occasional switching off of the hydraulic aggregate MA3 engine protection	- Too big working pressure in the hydraulic system.	Service engineer must reduce the pressure in hydraulic system.
6. The hydraulic aggregate cannot be started	Auxiliary contact on thermo-relay FA1 is defective.	Replace the defective contact on the motor FA1starter.
7. Hydraulic aggregate is switched on but the saw arm or the main vice can't be moved	- Wrong connection of electrical supply. The electrical phases are connected conversely.	The phases must be switched. Only service engineer is allowed to do this.
8. Cooling is not active	Lack of cooling agent.	Refill the tank with cooling agent.
	- Thermal relay is defective	Replace the thermal relay
	- Input hosepipe is broken or obstructed.	Check the cooling circuit and eventually cleanse the cooling system.
	- Cooling pump protection is defective	Check the protection of the cooling pump and change it if need be.

Problem	Possible causes	Repair
	- Cooling pump is defective.	Replace the cooling pump.

5.2.1. Hydraulic problems

Problem	Possible causes	Repair
1. Hydro generator is not supplying oil	• Reversed rotation	Check the correct connection of each phase. Reconnect the electrical phases properly.
	• Shortage of oil in the tank	Add hydraulic oil
	• Oil viscosity does not correspond to the prescribed viscosity value	Change hydraulic oil.
	• Hydro generator malfunction	Call service
	• Wrong power supply connection.	Check the correct connection of each phase. Reconnect the electrical phases properly.
2. Hydraulic oil contains bubbles	• Hydraulic circuit is not adequately bled	Bleed the hydraulic circuit.
	• Low level of oil	Add hydraulic oil
	• The hydro generator gasket is damaged	Call service
3. Increased mechanical noise	• Damaged clutch of the drive	Call service
	• Damaged or destroyed motor bearings	Call service
	• Air intake	Check for leaks.
4. Low pressure, pump supplies oil	• Failure on the safety valve	Wrong settings. Check the settings and adjust the safety valve.
	• Wear of the hydro generator	Call service
	• External or internal leakages	Call service
5. Hydro generator is seized	• Damage by solid particles in oil	Perform oil filtration or call the service.
	• Non-prescribed viscosity oil	Change hydraulic oil.
	• Wrong type of oil	Change hydraulic oil.
	• Exceeded lifespan of the pump	Call service
6. Overheating oil	• Cooler malfunction	Check the cooler function or call service.
	• Wear of the pump, energy is converted into heat	Call service
7. Hydraulic valve cannot be readjusted	• Electromagnet has no signal (voltage) - interrupted supply lines	Perform recheck.
	• Electromagnet coil burnt	Replace coil – Call service.

	•	the slider of the switchboard slackens	Replace slider – Call service

Note:

Frequency converter
Connect the machine to electrical networks with corresponding technical parameters only.
We recommend protecting the machine with RCD protection with U characteristics, which is able to compensate changes of current escaping from the filter of the frequency converter, so that additional equipments will not be required. We don't recommend protecting the machine with a standard protection for currents smaller than 100 mA (the standard used is 30 mA) because of current escape in accordance to frequency converters used by machine. Alternative solution should be a current protection (FI) with sensitivity of 100 mA.

6. Schémata / Schemas / Schematics

6.1. Elektrická schémata / Elektroschemas / Wiring diagrams
3x400 V + PE, 50Hz

Obsah / Table of contents / Inhalt

Strana Page Seite	Název strany Page name Seitenname	Datum Date Datum
1	Úvodní strana / Start page / Startseite	9.3.2016
2	Obsah / Table of contents / Inhaltsverzeichnis	9.3.2016
3	Kusovník artiklů / Parts list / Artikelstückliste	9.3.2016
3.a	Kusovník artiklů / Parts list / Artikelstückliste	9.3.2016
3.b	Kusovník artiklů / Parts list / Artikelstückliste	9.3.2016
3.c	Kusovník artiklů / Parts list / Artikelstückliste	9.3.2016
4	Rozmístění prvků v rozvaděči R1 / Placement of elements in enclosure R1 / Platzierung der Elemente im Schaltschrank R1	9.3.2016
5	Rozmístění prvků v ovládacím panelu OP1 / Deployment of elements in control panel OP 1 / Einsatz der Elemente in dem Bedienfeld OP 1	9.3.2016
6	Silová část / Power part / Feld partie	9.3.2016
7	Ovládací část / Control part / Betatigungssteurkreis	9.3.2016
8	Bezpečnostní okruh / Safety circle / Sicherheitsbereich	9.3.2016
9	Příslušenství / Accessories / Zubehör	9.3.2016

Kusovník artiklů / Parts list / Stückliste

Označení přístroje Device identification Geräteidentifikation	Typ přístroje Device description Gerätebeschreibung	Objednací číslo Type number Typennummer	Výrobce Manufacturer Hersteller	Skladové číslo Part number Lagernummer	Množství Quantity Menge	Umístění Location Stelle
-BM1	Bezpečnostní relé 24VDC, 3NO Safety relay 24VDC, 3NO Sicherheitsrelais 24VDC, 3NO	BT50	ABB	91.051.063	1	/8.6
-FU1	Pojistka trubičková - 2A/250V, pomalá, 5x20 Tube fuse - 2A/250V, slow, 5x20 Rohrsicherung - 2A / 250V, langsam, 5x20	T2A/250V	ESKA	91.230.001	1	/6.5
-FU2	Pojistka trubičková - 2A/250V, pomalá, 5x20 Tube fuse - 2A/250V, slow, 5x20 Rohrsicherung - 2A / 250V, langsam, 5x20	T2A/250V	ESKA	91.230.001	1	/6.5
-FU3	Pojistka trubičková - 2A/250V, pomalá, 5x20 Tube fuse - 2A/250V, slow, 5x20 Rohrsicherung - 2A / 250V, langsam, 5x20	T2A/250V	ESKA	91.230.001	1	/6.8
-M1	Asynchronní motor 1.5kW, 4P, 3x230/400V Asynchronous motor 1.5kW, 4P, 3x230/400V Asynchronmotor 1.5kW, 4P, 3x230/400V	TM2 90 4L B14-C140	EmP s.r.o.	91.001.217	1	/6.2
-SN1	Hlavice potenciometru - 24mm Head of potentiometer 24mm Leiter Potentiometer 24mm	S8877 BLK	GES-ELECTRONICS, a.s.	91.060.063	1	/7.8
-RCF11	Filtr RFC vývodový Efferent RFC filter Ableitenden RFC Filter	FBOPR1624	Ing. Miroslav Vlček	91.041.015	1	/6.1
-RCF12	Filtr RFC vývodový Efferent RFC filter Ableitenden RFC Filter	FBOPR1624	Ing. Miroslav Vlček	91.041.015	1	/6.1
-FU1	Svorka pojistková Fuse terminal Sicherungsklemme	WK4/THSi5U	WIELAND	91.251.102	1	/6.5
-FU2	Svorka pojistková Fuse terminal Sicherungsklemme	WK4/THSi5U	WIELAND	91.251.102	1	/6.5
-FU3	Svorka pojistková Fuse terminal Sicherungsklemme	WK4/THSi5U	WIELAND	91.251.102	1	/6.8
-FU4	Svorka pojistková Fuse terminal Sicherungsklemme	WK4/THSi5U	WIELAND	91.251.102	1	/6.4

The manufacturer reserves right to use an equivalent replacement device.

2

Kusovník artiklů / Parts list / Stückliste

Označení přístroje Device identification Geräteidentifikation	Typ přístroje Device description Gerätebeschreibung	Objednací číslo Type number Typennummer	Výrobce Manufacturer Hersteller	Skladové číslo Part number Lagernummer	Množství Quantity Menge	Umístění Location Stelle
-FU4	Pojistka trubičková - 700mA/250V, pomalá, 5x20 Tube fuse - 700mA/250V, slow, 5x20 Rohrsicherung - 700mA / 250V, langsam, 5x20	T700mA/250V	ESKA	91.230.069	1	/6.4
-FU5	Svorka pojistková Fuse terminal Sicherungsklemme	WK4/THSI5U	WIELAND	91.251.102	1	/6.5
-FU5	Pojistka trubičková - 700mA/250V, pomalá, 5x20 Tube fuse - 700mA/250V, slow, 5x20 Rohrsicherung - 700mA / 250V, langsam, 5x20	T700mA/250V	ESKA	91.230.069	1	/6.5
-KM11	Ministykač - 4kW/400V, 3P Mini contactor - 4kW/400V, 3P Mini-Schütz - 4kW / 400V, 3P	B6S-30-01-1.7-71	ABB	91.040.049	1	/8.8
-KM11	Pomocné kontakty - 1xNO+1xNC Auxiliary contacts - 1xNO+1xNC Hilfskontakte - 1xNO+1xNC	CAF 6-11M	ABB	91.041.042	1	/8.8
-KM12	Ministykač - 4kW/400V, 3P Mini contactor - 4kW/400V, 3P Mini-Schütz - 4kW / 400V, 3P	B6S-30-01-1.7-71	ABB	91.040.049	1	/8.9
-KM12	Pomocné kontakty - 1xNO+1xNC Auxiliary contacts - 1xNO+1xNC Hilfskontakte - 1xNO+1xNC	CAF 6-11M	ABB	91.041.042	1	/8.9
-PA1	Pojistkový odpínač pro válcové vložky - 3P Switch fuse for the cylinder inserts - 3P Schalter Sicherung für den Zylindereinsätze - 3P	E 93/32	ABB	91.241.014	1	/6.2
-QS1	Rukojeť odpínače 48x48mm - černá Handle switch 48x48mm - black Griffschalter 48x48mm - Schwarz	OHBS3PH	ABB	91.180.018	1	/6.1
-QS1	Kryt svorek Terminal shroud Klemmenabdeckung	OTS40T3	ABB	91.170.017	1	/6.1
-RE1	Patice pro relé Relay socket Relaissockel	CR-PSS	ABB	91.051.048	1	/7.5
-RE1	Paticové relé CR-P Plug-in relay CR-P Stecken Sie in Relais CR-P	CR-P024DC2	ABB	91.051.049	1	/7.5

The manufacturer reserves right to use an equivalent replacement device.

Kusovník artiklů / Parts list / Stückliste

Označení přístroje Device identification Geräteidentifikation	Typ přístroje Device description Gerätebeschreibung	Objednací číslo Type number Typennummer	Výrobce Manufacturer Hersteller	Skladové číslo Part number Lagernummer	Množství Quantity Menge	Umístění Location Stelle
-RE2	Patice pro relé Relay socket Relaissockel	CR-PSS	ABB	91.051.048	1	/7.8
-RE2	Paticové relé CR-P Plug-in relay CR-P Stecken Sie in Relais CR-P	CR-P024DC2	ABB	91.051.049	1	/7.8
-SA1/1	Kontaktní blok - 1NO Contact block - 1NO Kontaktblock - 1NO	M22-K10	EATON	91.061.022	1	/7.3
-SA1/1	Kontaktní blok - 1NC Contact block - 1NC Kontaktblock - 1NC	M22-K01	EATON	91.061.024	1	/7.6
-SA1/2	Hlavice s otočným přepínačem - 4 polohy Head with rotary switch - 4 positions Kopf mit Drehschalter - 4 Positionen	M22 - WRK4	EATON	91.060.087	1	/7.5
-SA1/2	Upevňovací adaptér Mounting adapter Montageadapter	M22-A4	EATON	91.061.045	1	/7.5
-SA1/2	Kontaktní blok - 1NO Contact block - 1NO Kontaktblock - 1NO	M22-K10	EATON	91.061.022	1	/7.5
-SA1/3	Kontaktní blok - 1NO Contact block - 1NO Kontaktblock - 1NO	M22-K10	EATON	91.061.022	1	/7.6
-SB1	Total stop - hlavice + 3xNC Emergency-stop mushroom push - button + 3xNC Not-Aus-Pilz - Taster + 3 xNC	YW1B-V4E02R	IDEC	91.060.084	1	/8.4
-SN1	Svorka rychloupínací Fastconnect clamp Fast Connect Klemm	WAGO 224-112	WAGO	91.250.009	3	/7.8
-TR1	Toroidní transformátor - 400V/230V/24V 175VA Toroidal transformer - 400V / 230V / 24V 175VA Ringkerntransformator - 400V / 230V / 24V 175VA	400V/230V/24V 2,5A 175VA	KARBAN s.r.o.	91.080.042	1	/6.6
-SQ3	Bezpečnostní koncový spínač - 2xNC Safety Limit Switch - 2x NC Sicherheitsendschalter - 2x NC	QKS8	KEDU	91.173.012	1	/8.4

The manufacturer reserves right to use an equivalent replacement device.

3.a

Kusovník artiklů / Parts list / Stückliste

Označení přístroje Device identification Geräteidentifikation	Typ přístroje Device description Gerätebeschreibung	Objednací číslo Type number Typennummer	Výrobce Manufacturer Hersteller	Skladové číslo Part number Lagernummer	Množství Quantity Menge	Umístění Location Stelle
-PA1	Pojistka válcová - 10A, 10x38, rychlá Tube fuse - 10A, 10x38, fast Rohrsicherung - 10A, 10x38, schnell	PV10 10A gG	OEZ	91.231.008	3	/6.2
-SQ1	Koncový spínač - 1NC+1NO Limit switch - 1NC+1NO Endschalter - 1NC+1NO	D4N-4A31	OMRON	91.173.007	1	/7.3
-SQ2	Koncový spínač - 1NC+1NO Limit switch - 1NC+1NO Endschalter - 1NC+1NO	D4N-4A31	OMRON	91.173.007	1	/7.4
-DM1	Usměrňovací můstek - 6A,100V Rectifier bridge - 6A, 100V Brückengleichrichter - 6A, 100V	KBU6B	SOS Electronic, spol. s r.o.	91.280.019	1	/6.7
-QS1	3 pólový odpínač, 16A Disconnector - 3P, 16A Trennschalter - 3P, 16A	OT16FT3	ABB	91.170.018	1	/6.1
-SB2	Hlavice tlačítka zelená Head green button Head green button	ZB5AA3	TELEMECANIQUE	91.060.014	1	/7.5
-SB3	Hlavice tlačítka černá Button black head Taste Mitesser	ZB5AA2	TELEMECANIQUE	91.060.013	1	/7.6
-SB4	Hlavice prosvětleného tlačítka žlutá The button head backlit yellow Der Knopf Kopf von hinten beleuchtet gelb	ZB5AW35	TELEMECANIQUE	91.060.023	1	/8.7
-SB5	Hlavice tlačítka černá Button black head Taste Mitesser	ZB5AA2	TELEMECANIQUE	91.060.013	1	/7.2
-SN1	Potenciometr 4k7 Potenciometer 4k7 Potenziometer 4k7	TP195 4k7-N20A	TES-Ostrava	91.283.002	1	/7.8
-FM1	Frekvenční měnič - 1.5kW, 3x400VAC Frequency converter - 1.5kW, 3x400VAC Frequenzumrichter - 1,5kW, 3x400VAC	VFD015EL43A	DELTA ELECTRONICS, INC.	91.012.122	1	/7.6

The manufacturer reserves right to use an equivalent replacement device.

3.b

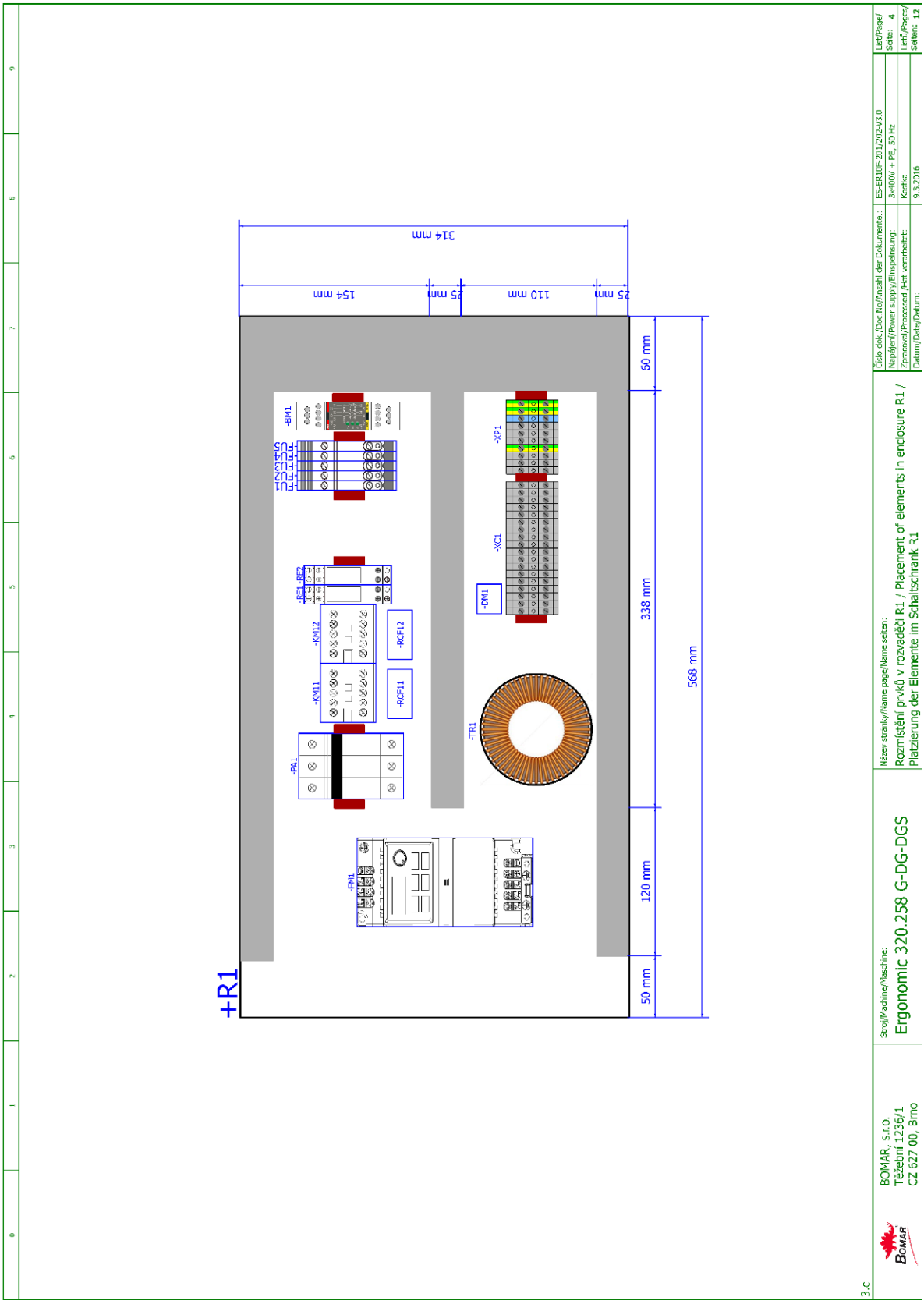

Schémata
Schemata
Schematics

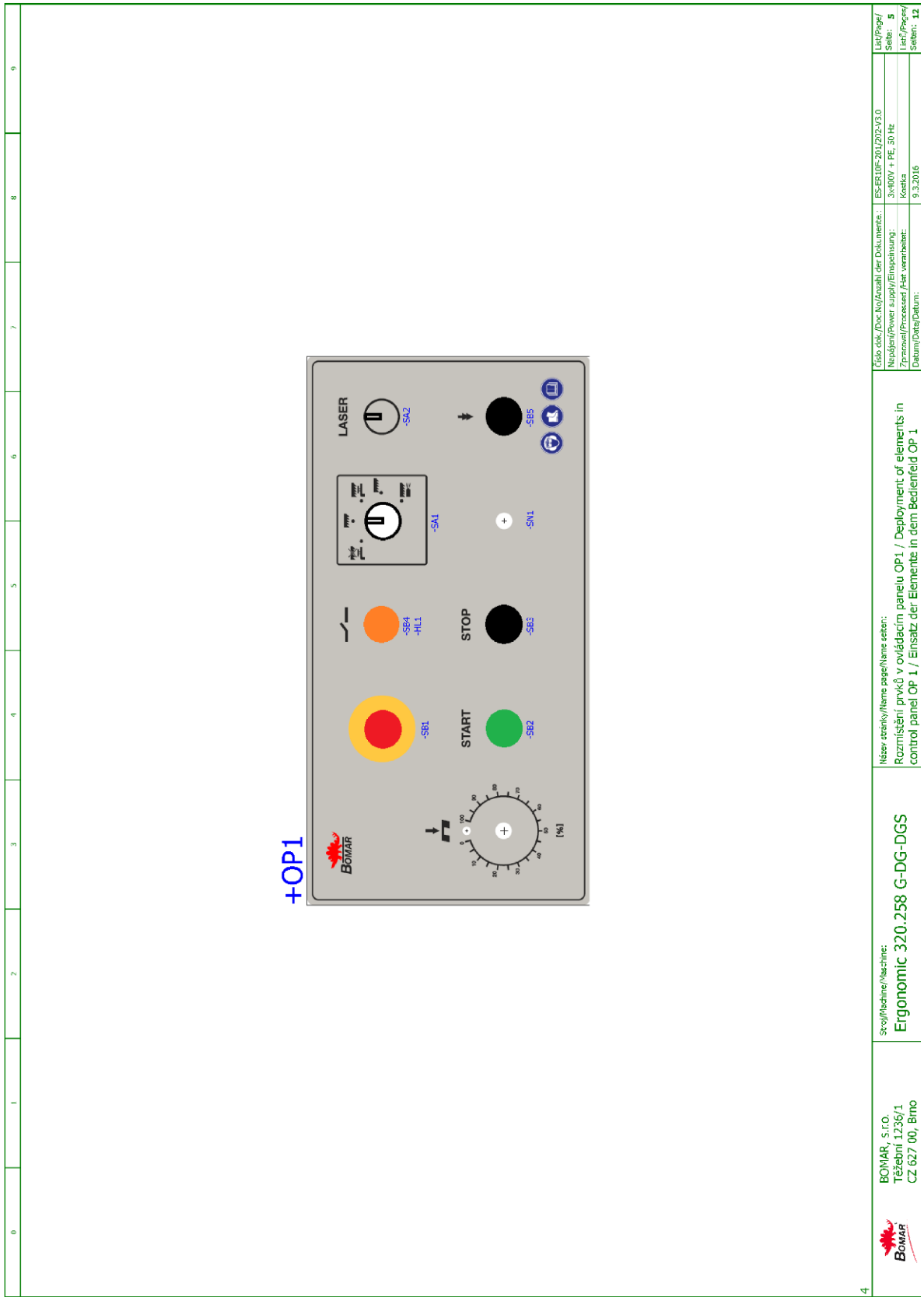
+OP1
BOMAR
LASER
-SA2
-SA1
-SB4
+HL1
-SB1
STOP
START
-SB3
-SB2
-SN1
-SB5
[%]
BOMAR, s.r.o.
Těžební 1236/1
CZ 627 00, Brno
Stroj/Machine/Maschine:
Ergonomic 320.258 G-DG-DGS
Název stránky/Name page/Name seiten:
Rozmístění prvků v ovládacím panelu OP1 / Deployment of elements in control panel OP 1 / Einsatz der Elemente in dem Bedienfeld OP 1
Číslo dok./Doc.No/Anzahl der Dokumente:
ES-ER10F-201/202-V3.0
Napájení/Power supply/Einspeisung:
3x400V + PE, 50 Hz
Zpracoval/Processed /Hat verarbeitet:
Kostka
Datum/Date/Datum:
9.3.2016
List/Page/
Seite: 5
List/Pages/
Seiten: 12

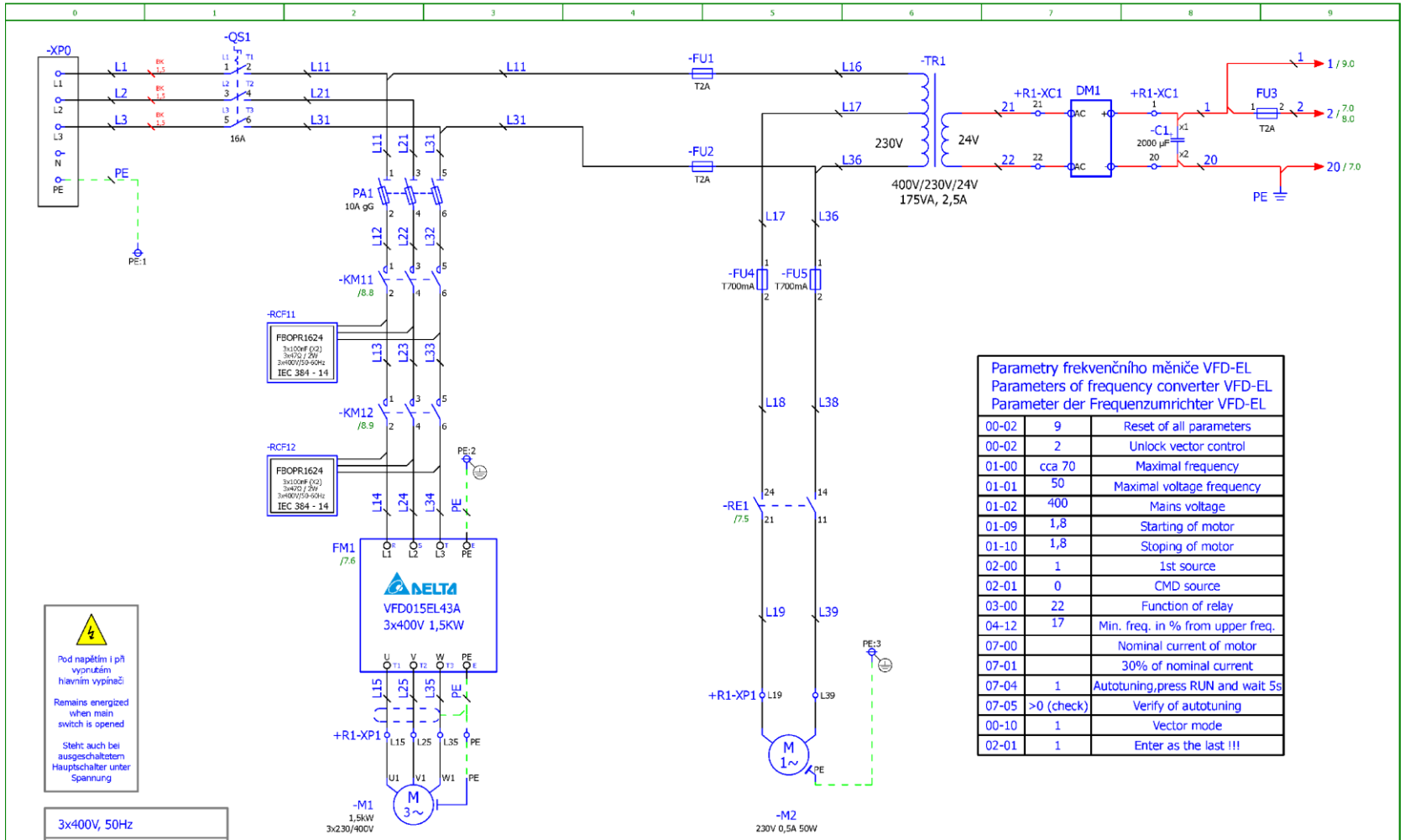

Parametry frekvenčního měniče VFD-EL Parameters of frequency converter VFD-EL Parameter der Frequenzumrichter VFD-EL		
00-02	9	Reset of all parameters
00-02	2	Unlock vector control
01-00	cca 70	Maximal frequency
01-01	50	Maximal voltage frequency
01-02	400	Mains voltage
01-09	1,8	Starting of motor
01-10	1,8	Stoping of motor
02-00	1	1st source
02-01	0	CMD source
03-00	22	Function of relay
04-12	17	Min. freq. in % from upper freq.
07-00		Nominal current of motor
07-01		30% of nominal current
07-04	1	Autotuning,press RUN and wait 5s
07-05	>0 (check)	Verify of autotuning
00-10	1	Vector mode
02-01	1	Enter as the last !!!

5

BOMAR, s.r.o.
Těžební 1236/1
CZ 627 00, Brno

Stroj/Machine/Maschine: Ergonomic 320.258 G-DG-DGS

Název stránky/Name page/Name seiten: Silová část / Power part / Feld partie

Číslo dok./Doc.No/Anzahl der Dokumente.:	ES-ER10F-201/202-V3.0	List/Page/Seite: 6
Napájení/Power supply/Einspeisung:	3x400V + PE, 50 Hz	Listů/Pages/Seiten: 12
Zpracoval/Processed /Hat verarbeitet:	Kostka	
Datum/Date/Datum:	25.4.2016	

Schéma
Schemata
Schematics

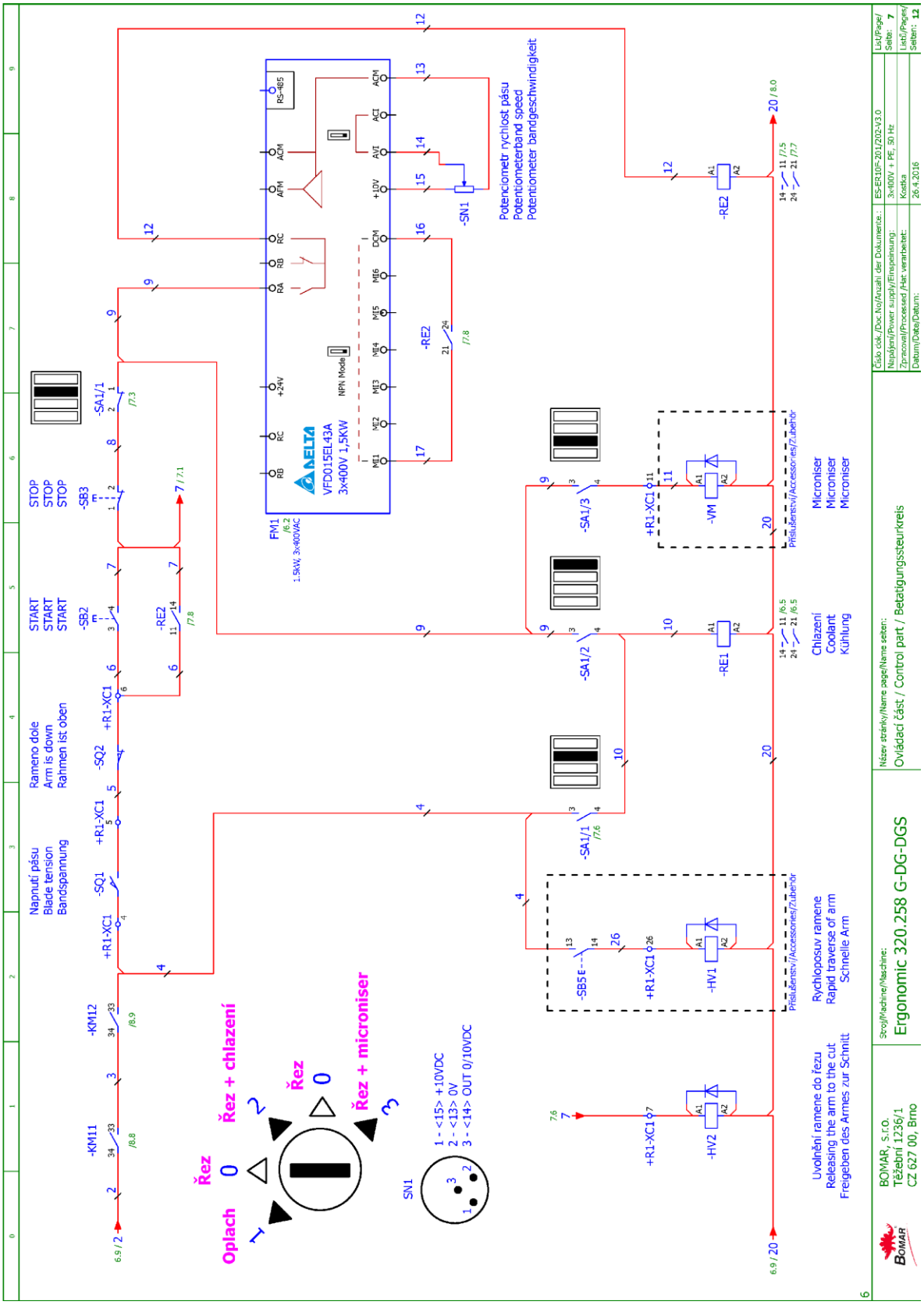
Napnutí pásu
Blade tension
Bandspannung
Rameno dole
Arm is down
Rahmen ist oben
START
START
START
STOP
STOP
STOP
-SB3
-SB2
-SA1/1
-SQ1
-SQ2
+R1-XC1
-KM11
-KM12
-RE2
FM1
VFD015EL43A
3x400V 1,5KW
NPN Mode
RS-485
-SN1
Potenciometr rychlost pásu
Potentiometerband speed
Potentiometer bandgeschwindigkeit
-SA1/2
-SA1/3
-VM
Microniser
Microniser
Microniser
-RE1
Chlazení
Coolant
Kühlung
-SB5 E
-HV1
Rychloposuv ramene
Rapid traverse of arm
Schnelle Arm
-HV2
Uvolnění ramene do řezu
Releasing the arm to the cut
Freigeben des Armes zur Schnitt
Řez
Oplach
Řez + chlazení
Řez
Řez + microniser
SN1
1 - <15> +10VDC
2 - <13> 0V
3 - <14> OUT 0/10VDC
Příslušenství/Accessories/Zubehör
Číslo dok./Doc.No/Anzahl der Dokumente:
ES-ER10F-201/202-V3.0
List/Page/Seite: 7
Napájení/Power supply/Einspeisung:
3x400V + PE, 50 Hz
Listů/Pages/Seiten: 12
Zpracoval/Processed /Hat verarbeitet:
Kostka
Datum/Data/Datum:
26.4.2016
Název stránky/Name page/Name seiten:
Ovládací část / Control part / Betätigungssteuerkreis
Stroj/Machine/Maschine:
Ergonomic 320.258 G-DG-DGS
BOMAR, s.r.o.
Třešňová 1236/1
CZ 627 00, Brno

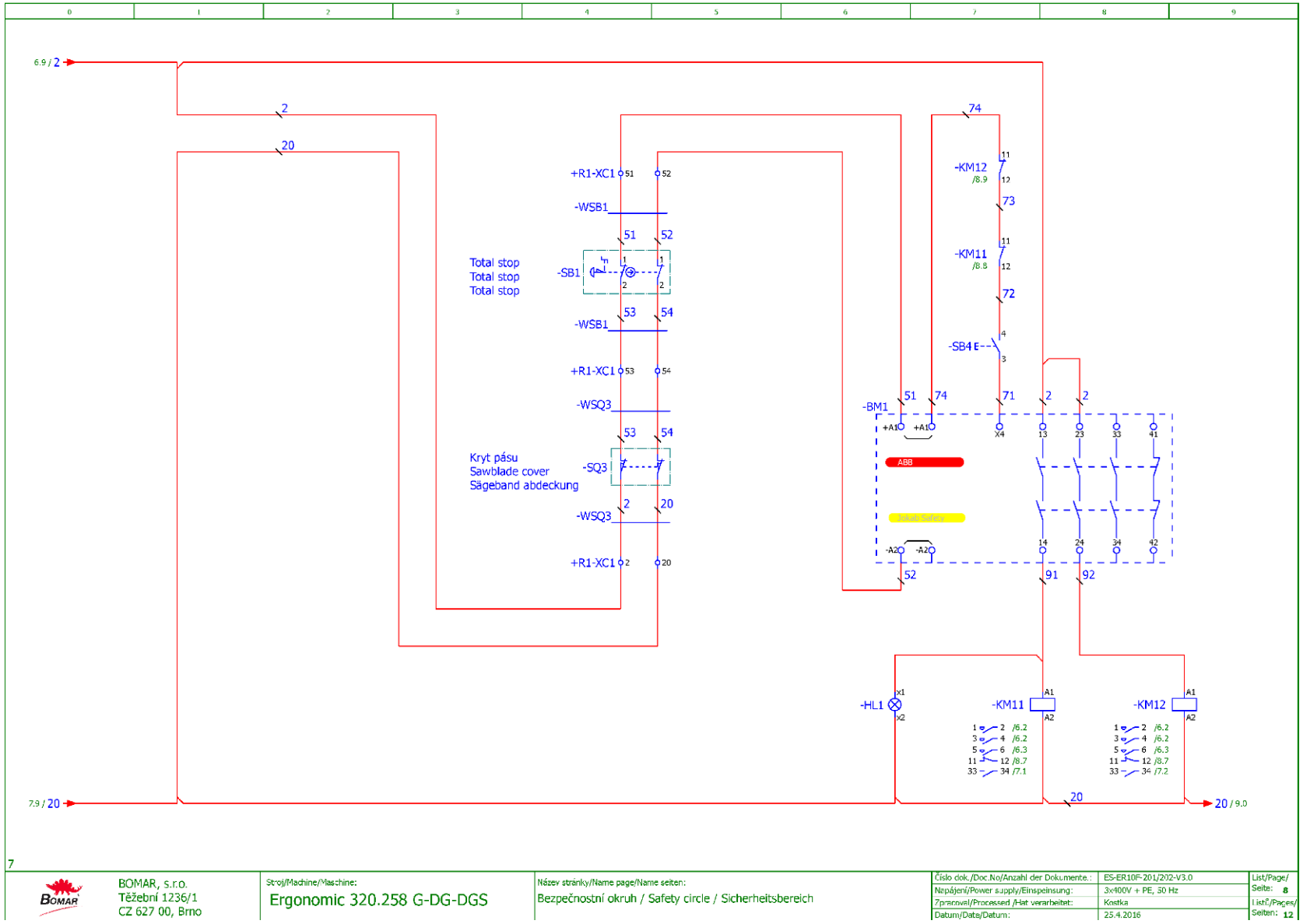

7

BOMAR, s.r.o.
Těžební 1236/1
CZ 627 00, Brno

Stroj/Machine/Maschine:
Ergonomic 320.258 G-DG-DGS

Název stránky/Name page/Name seiten:
Bezpečnostní okruh / Safety circle / Sicherheitsbereich

Číslo dok./Doc.No/Anzahl der Dokumente.:	ES-ER10F-201/202-V3.0	List/Page/Seite: 8
Napájení/Power supply/Einspeisung:	3x400V + PE, 50 Hz	List/Pages/Seiten: 12
Zpracoval/Processed /Hat verarbeitet:	Kostka	
Datum/Date/Datum:	25.4.2016	

Schéma
Schemata
Schematics

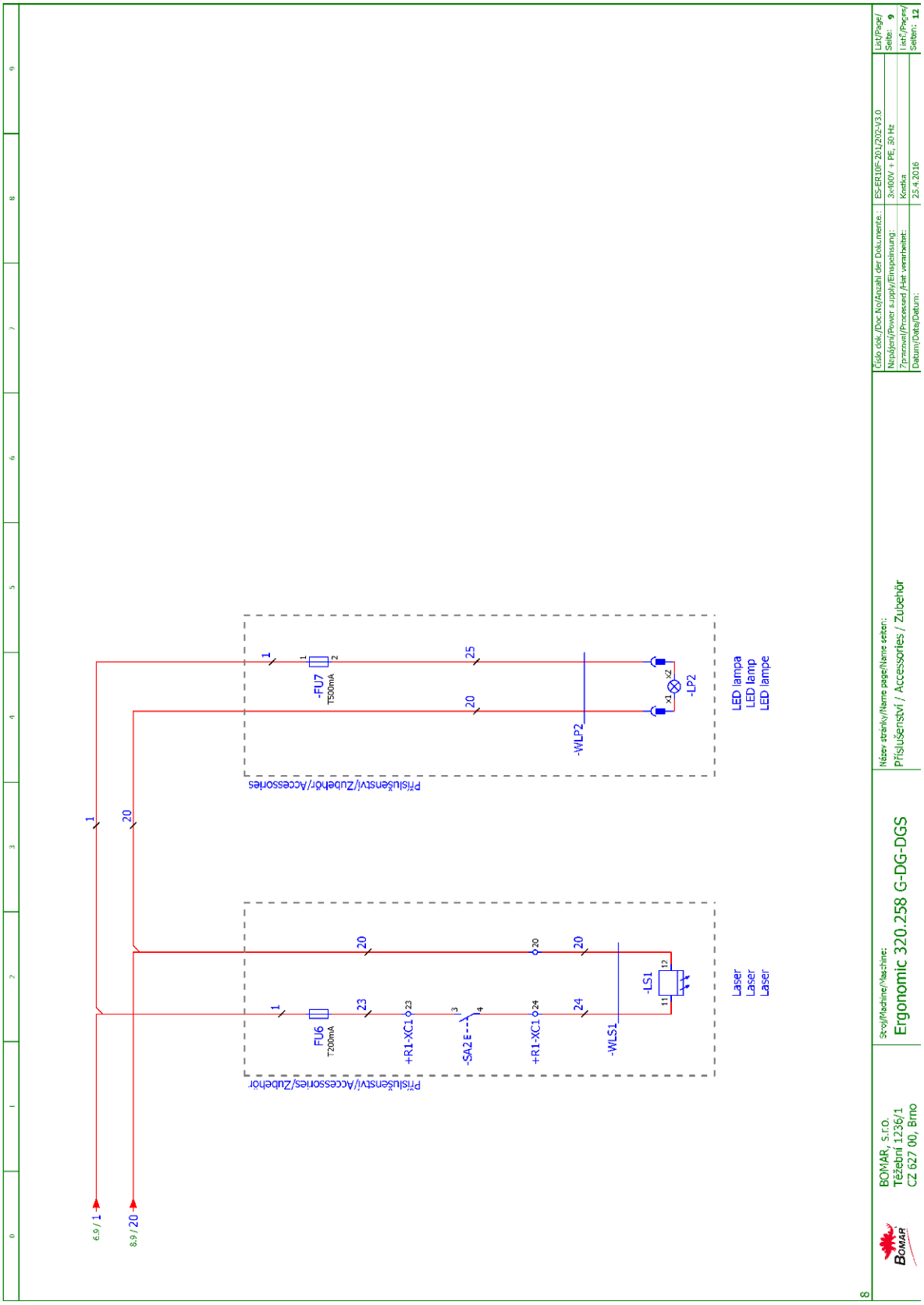
6.9 / 1
8.9 / 20
1
20
Příslušenství/Zubehör/Accessories
FU6
T200mA
+R1-XC1
-SA2
+R1-XC1
-WLS1
-LS1
Laser
Laser
Laser
Příslušenství/Zubehör/Accessories
-FU7
T500mA
-WLP2
-LP2
LED lampa
LED lamp
LED lampe
Číslo dok./Doc.No/Anzahl der Dokumente:
ES-ER10F-201/202-V3.0
Napájení/Power supply/Einspeisung:
3x100V + PE, 50 Hz
Zpracoval/Processed /Hat verarbeitet:
Kosička
Datum/Date/Datum:
25.4.2016
List/Page/
Seite: 9
List/Pages/
Seiten: 12
Název stránky/Name page/Name seitan:
Příslušenství / Accessories / Zubehör
Stroj/Machine/Maschine:
Ergonomic 320.258 G-DG-DGS
BOMAR, s.r.o.
Těžební 1236/1
CZ 627 00, Brno

6.2. Elektrické schéma /Elektroschema /Wiring diagrams – 3x230 V + PE, 50H

Obsah / Table of contents / Inhalt

Strana Page Seite	Název strany Page name Seitenname	Datum Date Datum
/1	Úvodní strana / Start page / Startseite	06.06.2019
/2	Obsah / Table of contents / Inhaltsverzeichnis	06.06.2019
/3	Kusovník artiklů / Parts list / Artikelstückliste	06.06.2019
/3.a	Kusovník artiklů / Parts list / Artikelstückliste	06.06.2019
/3.b	Kusovník artiklů / Parts list / Artikelstückliste	06.06.2019
/3.c	Kusovník artiklů / Parts list / Artikelstückliste	06.06.2019
/3.d	Kusovník artiklů / Parts list / Artikelstückliste	06.06.2019
/4	Rozmístění prvků v rozvaděči R1 / Placement of elements in enclosure R1 / Platzierung der Elemente im Schaltschrank R1	06.06.2019
/5	Rozmístění prvků v ovládacím panelu OP1 / Deployment of elements in control panel OP 1 / Einsatz der Elemente in dem Bedienfeld OP 1	09.03.2016
/6	Silová část / Power part / Feld partie	06.06.2019
/7	Ovládací část / Control part / Betatigungssteurkreis	01.02.2018
/8	Bezpečnostní okruh / Safety circle / Sicherheitsbereich	01.02.2018
/9	Příslušenství / Accessories / Zubehör	06.06.2019

Kusovník artiklů / Parts list / Stückliste

Označení přístroje Device identification Geräteidentifikation	Typ přístroje Device description Gerätebeschreibung	Objednací číslo Type number Typennummer	Výrobce Manufacturer Hersteller	Skladové číslo Part number Lagernummer	Množství Quantity Menge	Umístění Location Stelle
-BM1	Bezpečnostní relé 24VDC, 3NO Safety relay 24VDC, 3NO Sicherheitsrelais 24VDC, 3NO	BT50	ABB	91.051.063	1	/8.6
-FU1	Pojistka trubičková - 2A/250V, pomalá, 5x20 Tube fuse - 2A/250V, slow, 5x20 Rohrsicherung - 2A / 250V, langsam, 5x20	T2A/250V	ESKA	91.230.001	1	/6.4
-FU2	Pojistka trubičková - 2A/250V, pomalá, 5x20 Tube fuse - 2A/250V, slow, 5x20 Rohrsicherung - 2A / 250V, langsam, 5x20	T2A/250V	ESKA	91.230.001	1	/6.4
-FU3	Pojistka trubičková - 2A/250V, pomalá, 5x20 Tube fuse - 2A/250V, slow, 5x20 Rohrsicherung - 2A / 250V, langsam, 5x20	T2A/250V	ESKA	91.230.001	1	/6.9
-SN1	Hlavice potenciometru - 24mm Head of potentiometer 24mm Leiter Potentiometer 24mm	S8877 BLK	GES-ELECTRONICS, a.s.	91.060.063	1	/7.8
-C1	Kondenzátor Condenser Kondensator	2200uF/50V	GM Electronic s.r.o.	91.282.063	1	/6.8
-RCF11	Filtr RFC vývodový Efferent RFC filter Ableitenden RFC Filter	FBOPR1624	Ing. Miroslav Vlček	91.041.015	1	/6.1
-RCF12	Filtr RFC vývodový Efferent RFC filter Ableitenden RFC Filter	FBOPR1624	Ing. Miroslav Vlček	91.041.015	1	/6.1
-FU1	Svorka pojistková Fuse terminal Sicherungsklemme	WK4/THSi5U	WIELAND	91.251.102	1	/6.4
-FU2	Svorka pojistková Fuse terminal Sicherungsklemme	WK4/THSi5U	WIELAND	91.251.102	1	/6.4
-FU3	Svorka pojistková Fuse terminal Sicherungsklemme	WK4/THSi5U	WIELAND	91.251.102	1	/6.9
-FU4	Svorka pojistková Fuse terminal Sicherungsklemme	WK4/THSi5U	WIELAND	91.251.102	1	/6.5

The manufacturer reserves right to use an equivalent replacement device.

2

Kusovník artiklů / Parts list / Stückliste

Označení přístroje Device identification Geräteidentifikation	Typ přístroje Device description Gerätebeschreibung	Objednací číslo Type number Typennummer	Výrobce Manufacturer Hersteller	Skladové číslo Part number Lagernummer	Množství Quantity Menge	Umístění Location Stelle
-FU4	Pojistka trubičková - 700mA/250V, pomalá, 5x20 Tube fuse - 700mA/250V, slow, 5x20 Rohrsicherung - 700mA / 250V, langsam, 5x20	T700mA/250V	ESKA	91.230.069	1	/6.5
-FU5	Svorka pojistková Fuse terminal Sicherungsklemme	WK4/THSi5U	WIELAND	91.251.102	1	/6.5
-FU5	Pojistka trubičková - 700mA/250V, pomalá, 5x20 Tube fuse - 700mA/250V, slow, 5x20 Rohrsicherung - 700mA / 250V, langsam, 5x20	T700mA/250V	ESKA	91.230.069	1	/6.5
-FU6	Svorka pojistková Fuse terminal Sicherungsklemme	WK4/THSi5U	WIELAND	91.251.102	1	/4.6
-FU7	Svorka pojistková Fuse terminal Sicherungsklemme	WK4/THSi5U	WIELAND	91.251.102	1	/4.6
-KM11	Ministykač - 4kW/400V, 3P Mini contactor - 4kW/400V, 3P Mini-Schütz - 4kW / 400V, 3P	B6S-30-01-1.7-71	ABB	91.040.049	1	/8.8
-KM11	Pomocné kontakty - 1xNO+1xNC Auxiliary contacts - 1xNO+1xNC Hilfskontakte - 1xNO+1xNC	CAF 6-11M	ABB	91.041.042	1	/8.8
-KM12	Ministykač - 4kW/400V, 3P Mini contactor - 4kW/400V, 3P Mini-Schütz - 4kW / 400V, 3P	B6S-30-01-1.7-71	ABB	91.040.049	1	/8.9
-KM12	Pomocné kontakty - 1xNO+1xNC Auxiliary contacts - 1xNO+1xNC Hilfskontakte - 1xNO+1xNC	CAF 6-11M	ABB	91.041.042	1	/8.9
-PA1	Pojistkový odpínač pro válcové vložky - 3P Switch fuse for the cylinder inserts - 3P Schalter Sicherung für den Zylindereinsätze - 3P	E 93/32	ABB	91.241.014	1	/6.2
-QS1	Rukojeť odpínače 48x48mm - černá Handle switch 48x48mm - black Griffschalter 48x48mm - Schwarz	OHBS3PH	ABB	91.180.018	1	/6.1
-QS1	Kryt svorek Terminal shroud Klemmenabdeckung	OTS40T3	ABB	91.170.017	1	/6.1

The manufacturer reserves right to use an equivalent replacement device.

Kusovník artiklů / Parts list / Stückliste

Označení přístroje Device identification Geräteidentifikation	Typ přístroje Device description Gerätebeschreibung	Objednací číslo Type number Typennummer	Výrobce Manufacturer Hersteller	Skladové číslo Part number Lagernummer	Množství Quantity Menge	Umístění Location Stelle
-RE1	Patice pro relé Relay socket Relaissockel	CR-PSS	ABB	91.051.048	1	/7.5
-RE1	Paticové relé CR-P Plug-in relay CR-P Stecken Sie in Relais CR-P	CR-P024DC2	ABB	91.051.049	1	/7.5
-RE2	Patice pro relé Relay socket Relaissockel	CR-PSS	ABB	91.051.048	1	/7.8
-RE2	Paticové relé CR-P Plug-in relay CR-P Stecken Sie in Relais CR-P	CR-P024DC2	ABB	91.051.049	1	/7.8
-SA1/1	Kontaktní blok - 1NO Contact block - 1NO Kontaktblock - 1NO	M22-K10	EATON	91.061.022	1	/7.3
-SA1/1	Kontaktní blok - 1NC Contact block - 1NC Kontaktblock - 1NC	M22-K01	EATON	91.061.024	1	/7.6
-SA1/2	Hlavice s otočným přepínačem - 4 polohy Head with rotary switch - 4 positions Kopf mit Drehschalter - 4 Positionen	M22 - WRK4	EATON	91.060.087	1	/7.5
-SA1/2	Upevňovací adaptér Mounting adapter Montageadapter	M22-A4	EATON	91.061.045	1	/7.5
-SA1/2	Kontaktní blok - 1NO Contact block - 1NO Kontaktblock - 1NO	M22-K10	EATON	91.061.022	1	/7.5
-SA1/3	Kontaktní blok - 1NO Contact block - 1NO Kontaktblock - 1NO	M22-K10	EATON	91.061.022	1	/7.6
-SB1	Total stop - hlavice + 3xNC Emergency-stop mushroom push - button + 3xNC Not-Aus-Pilz - Taster + 3 xNC	YW1B-V4E02R	IDEC	91.060.084	1	/8.4
-SN1	Svorka rychloupínací Fastconnect clamp Fast Connect Klemm	WAGO 224-112	WAGO	91.250.009	3	/7.8

The manufacturer reserves right to use an equivalent replacement device.

3.a

Kusovník artiklů / Parts list / Stückliste

Označení přístroje Device identification Geräteidentifikation	Typ přístroje Device description Gerätebeschreibung	Objednací číslo Type number Typennummer	Výrobce Manufacturer Hersteller	Skladové číslo Part number Lagernummer	Množství Quantity Menge	Umístění Location Stelle
-TR1	Toroidní transformátor - 400V/230V/20V 3,5A 185VA Toroidal transformer - 400V / 230V / 20V 3.5A 185 VA Ringkerntransformator - 400V / 230V / 20V 3.5A 185 VA	400V/230V/20V 3,5A 185VA	KARBAN s.r.o.	91.080.041	1	/6.6
-SQ3	Bezpečnostní koncový spínač - 2xNC Safety Limit Switch - 2x NC Sicherheitsendschalter - 2x NC	QKS8	KEDU	91.173.012	1	/8.4
-PA1	Pojistka válcová - 10A, 10x38, rychlá Tube fuse - 10A, 10x38, fast Rohrsicherung - 10A, 10x38, schnell	PV10 10A gG	OEZ	91.231.008	3	/6.2
-SQ1	Koncový spínač - 1NC+1NO Limit switch - 1NC+1NO Endschalter - 1NC+1NO	D4N-4A31	OMRON	91.173.007	1	/7.3
-SQ2	Koncový spínač - 1NC+1NO Limit switch - 1NC+1NO Endschalter - 1NC+1NO	D4N-4A31	OMRON	91.173.007	1	/7.4
-FM1	Frekvenční měnič - 1.5kW, 3x230VAC Frequency converter - 1.5kW, 3x230VAC Frequenzumrichter - 1.5kW, 3x230VAC	VFD015EL23A	DELTA ELECTRONICS, INC.	91.012.172	1	/6.2
-DM1	Usměrňovací můstek - 6A,100V Rectifier bridge - 6A, 100V Brückengleichrichter - 6A, 100V	KBU6B	SOS Electronic, spol. s r.o.	91.280.019	1	/6.7
-QS1	3 pólový odpínač, 16A Disconnector - 3P, 16A Trennschalter - 3P, 16A	OT16FT3	ABB	91.170.018	1	/6.1
-SB2	Hlavice tlačítka zelená Head green button Head green button	ZB5AA3	TELEMECANIQUE	91.060.014	1	/7.5
-SB3	Hlavice tlačítka černá Button black head Taste Mitesser	ZB5AA2	TELEMECANIQUE	91.060.013	1	/7.6
-SB4	Hlavice prosvětleného tlačítka žlutá The button head backlit yellow Der Knopf Kopf von hinten beleuchtet gelb	ZB5AW35	TELEMECANIQUE	91.060.023	1	/8.7
-SB5	Hlavice tlačítka černá Button black head Taste Mitesser	ZB5AA2	TELEMECANIQUE	91.060.013	1	/7.2

The manufacturer reserves right to use an equivalent replacement device.

3.b

Kusovník artiklů / Parts list / Stückliste

Označení přístroje Device identification Geräteidentifikation	Typ přístroje Device description Gerätebeschreibung	Objednací číslo Type number Typennummer	Výrobce Manufacturer Hersteller	Skladové číslo Part number Lagernummer	Množství Quantity Menge	Umístění Location Stelle
-SN1	Potenciometr 4k7 Potenciometer 4k7 Potenziometer 4k7	TP195 4k7-N20A	TES-Ostrava	91.283.002	1	/7.8
-RCF0	Vstupní odrušovací filtr 10A Inout noise filter 10A Eingangsrauschfilter 10A	10EB15/50/CF15	WIDECOM TECHNOLOGY s.r.o.	91.041.072	1	/6.2

The manufacturer reserves right to use an equivalent replacement device.

3.c

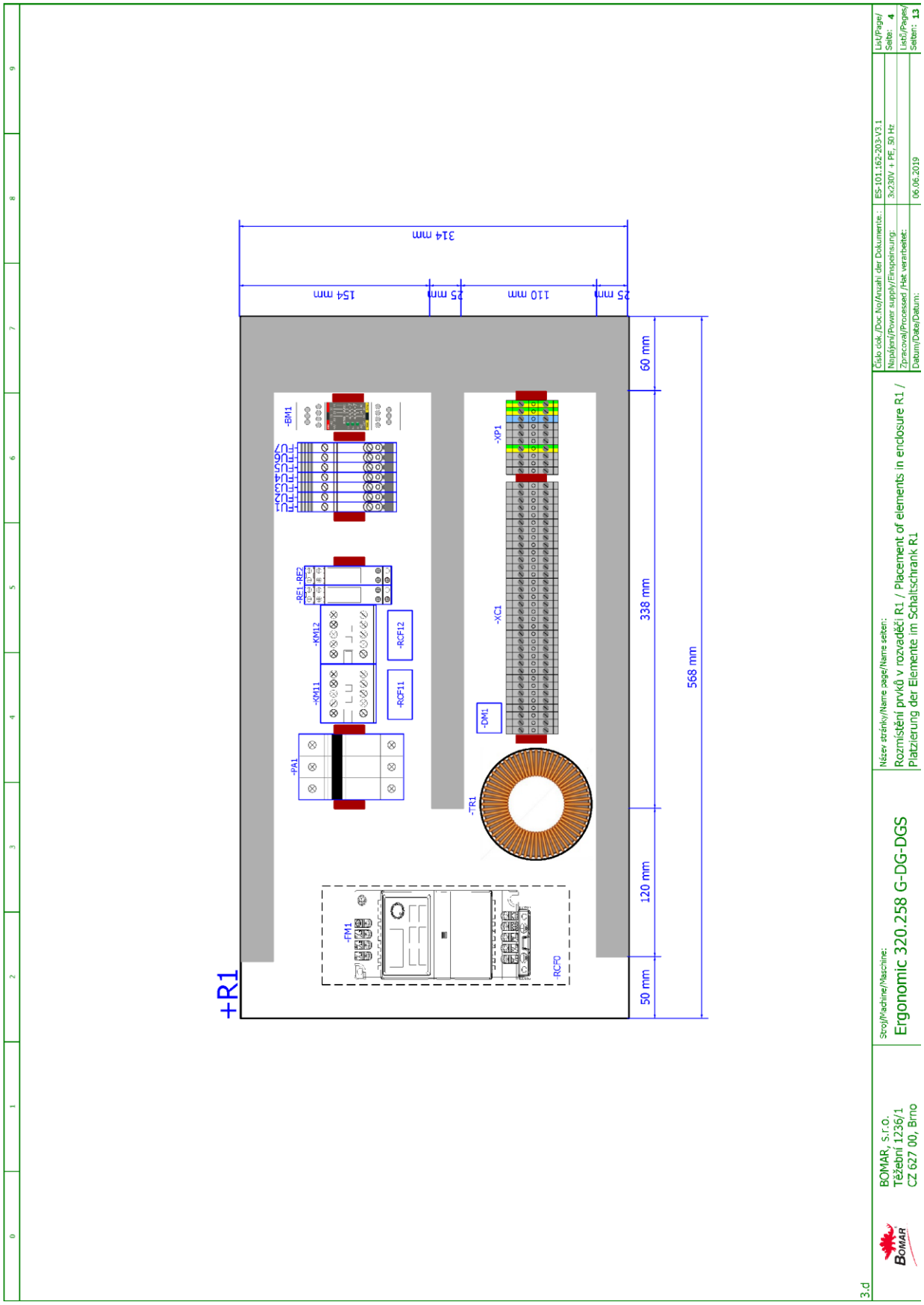
+R1
-FM1
-RCF0
-PA1
-KM11
-KM12
-RE1 -RE2
-RCF11
-RCF12
-BM1
-TR1
-DM1
-XC1
-XP1
314 mm
154 mm
25 mm
110 mm
25 mm
60 mm
338 mm
568 mm
120 mm
50 mm
3.d
BOMAR, s.r.o.
Těžební 1236/1
CZ 627 00, Brno
Stroj/Machine/Maschine:
Ergonomic 320.258 G-DG-DGS
Název stránky/Name page/Name seiten:
Rozmístění prvků v rozváděči R1 / Placement of elements in enclosure R1 /
Platzierung der Elemente im Schaltschrank R1
Číslo dok./Doc.No/Anzahl der Dokumente:
ES-101.162-203-V3.1
Napájení/Power supply/Einspeisung:
3x230V + PE, 50 Hz
Zpracoval/Processed /Hat verarbeitet:
Datum/Date/Datum:
06.06.2019
List/Page/
Seite: 4
List/Pages/
Seiten: 13

0	1	2	3	4	5	6	7	8	9

+OP1

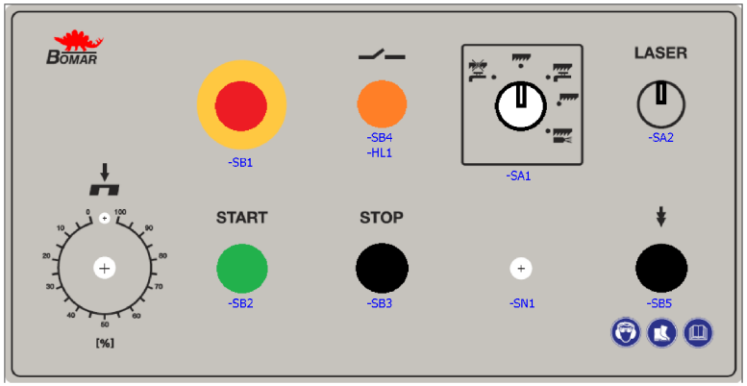

4

BOMAR, s.r.o. Těžební 1236/1 CZ 627 00, Brno	Stroj/Machine/Maschine: Ergonomic 320.258 G-DG-DGS	Název stránky/Name page/Name seiten: Rozmístění prvků v ovládacím panelu OP1 / Deployment of elements in control panel OP 1 / Einsatz der Elemente in dem Bedienfeld OP 1	Číslo dok./Doc.No/Anzahl der Dokumente.:	ES-101.162-203-V3.1	List/Page/Seite: 5
			Napájení/Power supply/Einspeisung:	3x230V + PE, 50 Hz	Listů/Pages/Seiten: 13
			Zpracoval/Processed /Hat verarbeitet:		
			Datum/Date/Datum:	09.03.2016	

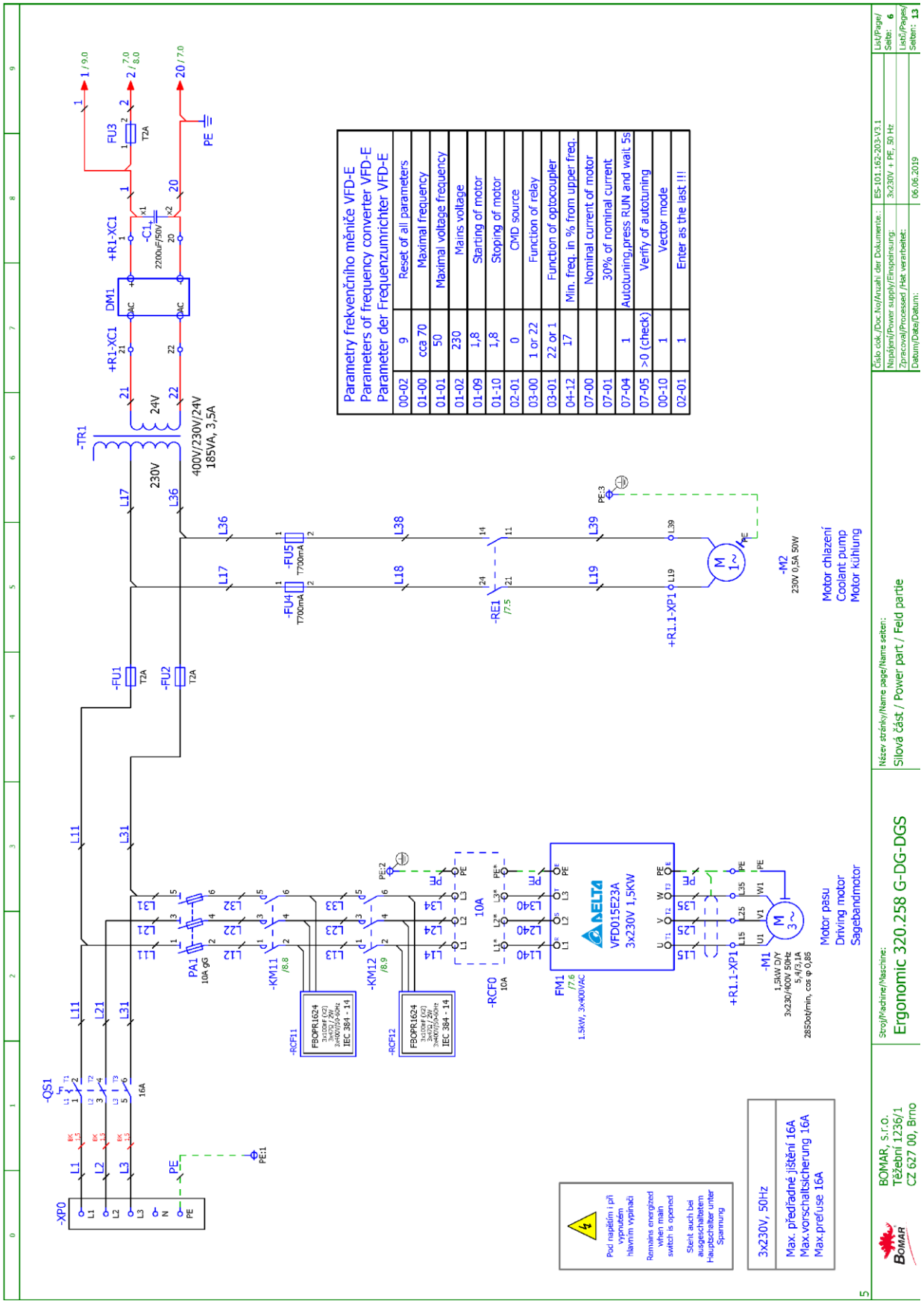
Parametry frekvenčního měniče VFD-E
Parameters of frequency converter VFD-E
Parameter der Frequenzumrichter VFD-E
00-02 9 Reset of all parameters
01-00 cca 70 Maximal frequency
01-01 50 Maximal voltage frequency
01-02 230 Mains voltage
01-09 1,8 Starting of motor
01-10 1,8 Stoping of motor
02-01 0 CMD source
03-00 1 or 22 Function of relay
03-01 22 or 1 Function of optocoupler
04-12 17 Min. freq. in % from upper freq.
07-00 Nominal current of motor
07-01 30% of nominal current
07-04 1 Autotuning,press RUN and wait 5s
07-05 >0 (check) Verify of autotuning
00-10 1 Vector mode
02-01 1 Enter as the last !!!
-XP0
-QS1
-TR1
400V/230V/24V
185VA, 3,5A
-FU1 T2A
-FU2 T2A
-FU3 T2A
-FU4 T700mA
-FU5 T700mA
PA1 10A gG
-KM11 /8.8
-KM12 /8.9
-RCF11
-RCF12
-RCF0 10A
-RE1 /7.5
FM1 /7.6
1.5kW, 3x400VAC
VFD015E23A
3x230V 1,5KW
-M1
1,5kW D/Y
3x230/400V 50Hz
5,4/3,1A
2850ot/min, cos φ 0,85
-M2
230V 0,5A 50W
Motor chlazení
Coolant pump
Motor kühlung
Motor pasu
Driving motor
Sagebandmotor
Pod napětím i při vypnutém hlavním vypínači
Remains energized when main switch is opened
Steht auch bei ausgeschaltetem Hauptschalter unter Spannung
3x230V, 50Hz
Max. předřadné jištění 16A
Max.vorschaltsicherung 16A
Max.prefuse 16A
BOMAR, s.r.o.
Těžební 1236/1
CZ 627 00, Brno
Stroj/Machine/Maschine:
Ergonomic 320.258 G-DG-DGS
Název stránky/Name page/Name seiten:
Silová část / Power part / Feld partie
Číslo dok./Doc.No/Anzahl der Dokumente:
ES-101.162-203-V3.1
Napájení/Power supply/Einspeisung:
3x230V + PE, 50 Hz
Zpracoval/Processed /Hat verarbeitet:
Datum/Date/Datum:
06.06.2019
List/Page/Seite: 6
List/Pages/Seiten: 13

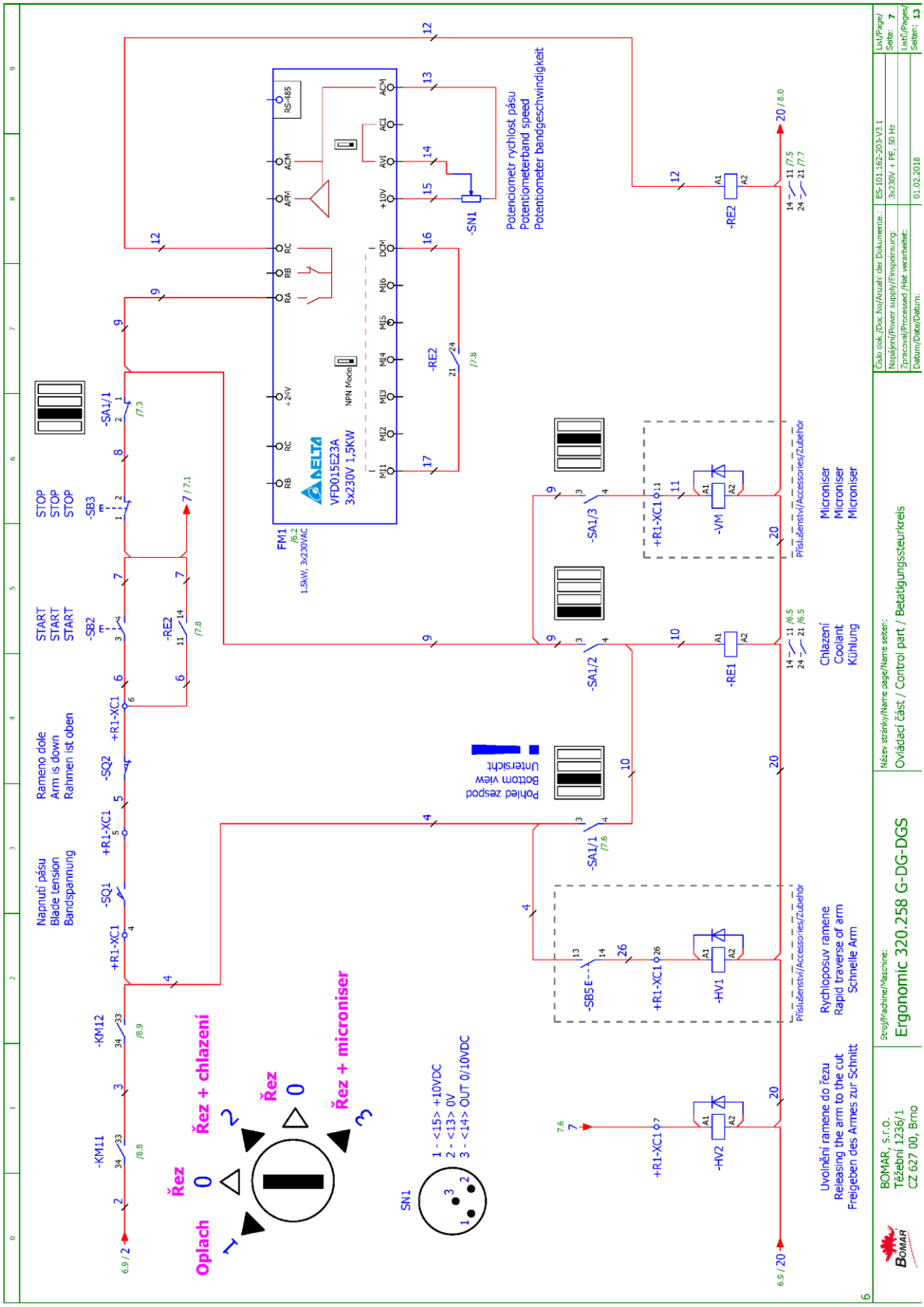
Napnutí pásu
Blade tension
Bandspannung
Rameno dole
Arm is down
Rahmen ist oben
START
START
START
STOP
STOP
STOP
-SB2
-SB3
-SA1/1
-SQ1
-SQ2
+R1-XC1
-KM11
-KM12
-RE2
FM1
VFD015E23A
3x230V 1,5KW
1,5kW, 3x230VAC
NPN Mode
RS-485
Potenciometr rychlost pásu
Potentiometerband speed
Potentiometer bandgeschwindigkeit
-SN1
Oplach
Řez
Řez + chlazení
Řez + microniser
SN1
1 - <15> +10VDC
2 - <13> 0V
3 - <14> OUT 0/10VDC
Pohled zespod
Bottom view
Unterseite
-SA1/2
-SA1/3
-SB5
-HV1
-HV2
-VM
-RE1
Příslušenství/Accessories/Zubehör
Microniser
Microniser
Microniser
Chlazení
Coolant
Kühlung
Rychloposuv ramene
Rapid traverse of arm
Schnelle Arm
Uvolnění ramene do řezu
Releasing the arm to the cut
Freigeben des Armes zur Schnitt
BOMAR, s.r.o.
Těžební 1236/1
CZ 627 00, Brno
Stroj/Machine/Maschine:
Ergonomic 320.258 G-DG-DGS
Název stránky/Name page/Name seiten:
Ovládací část / Control part / Betatigungssteuerkreis
Číslo ock./Doc.No/Anzahl der Dokumente:
ES-101.162-203-V3.1
Napájení/Power supply/Einspeisung:
3x230V + PE, 50 Hz
Zpracoval/Processed /Hat verarbeitet:
Datum/Date/Datum:
01.02.2018
List/Page/Seite: 7
List/Pages/Seiten: 13

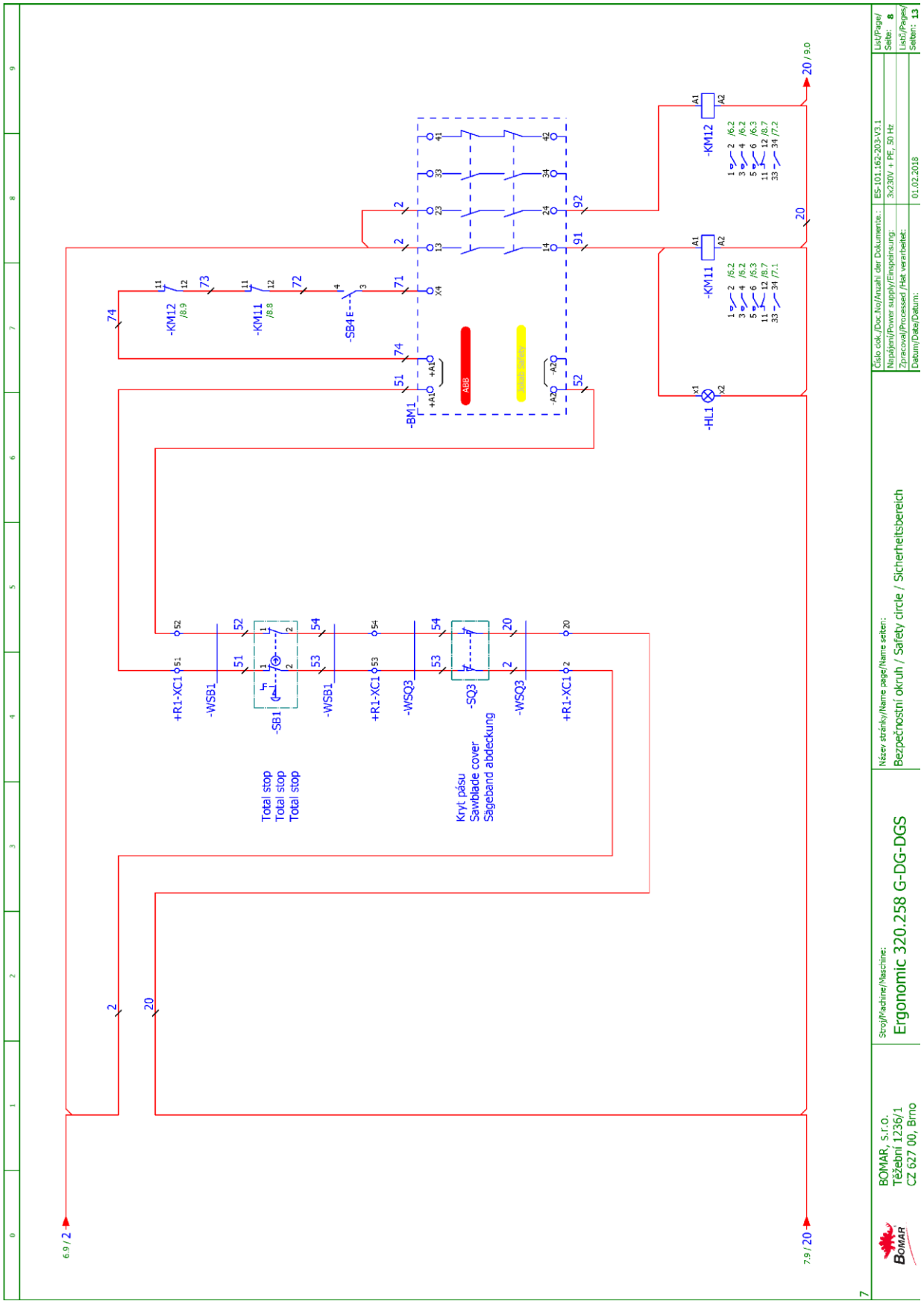
-KM12
-KM11
-SB4
-BM1
-HL1
+R1-XC1
-WSB1
-SB1
-WSQ3
-SQ3
Total stop
Total stop
Total stop
Kryt pásu
Sawblade cover
Sageband abdeckung
Název stránky/Name page/Name seiten:
Bezpečnostní okruh / Safety circle / Sicherheitsbereich
Stroj/Machine/Maschine:
Ergonomic 320.258 G-DG-DGS
BOMAR, s.r.o.
Těžební 1236/1
CZ 627 00, Brno
ES-101.162-203-V3.1
3x230V + PE, 50 Hz
01.02.2018

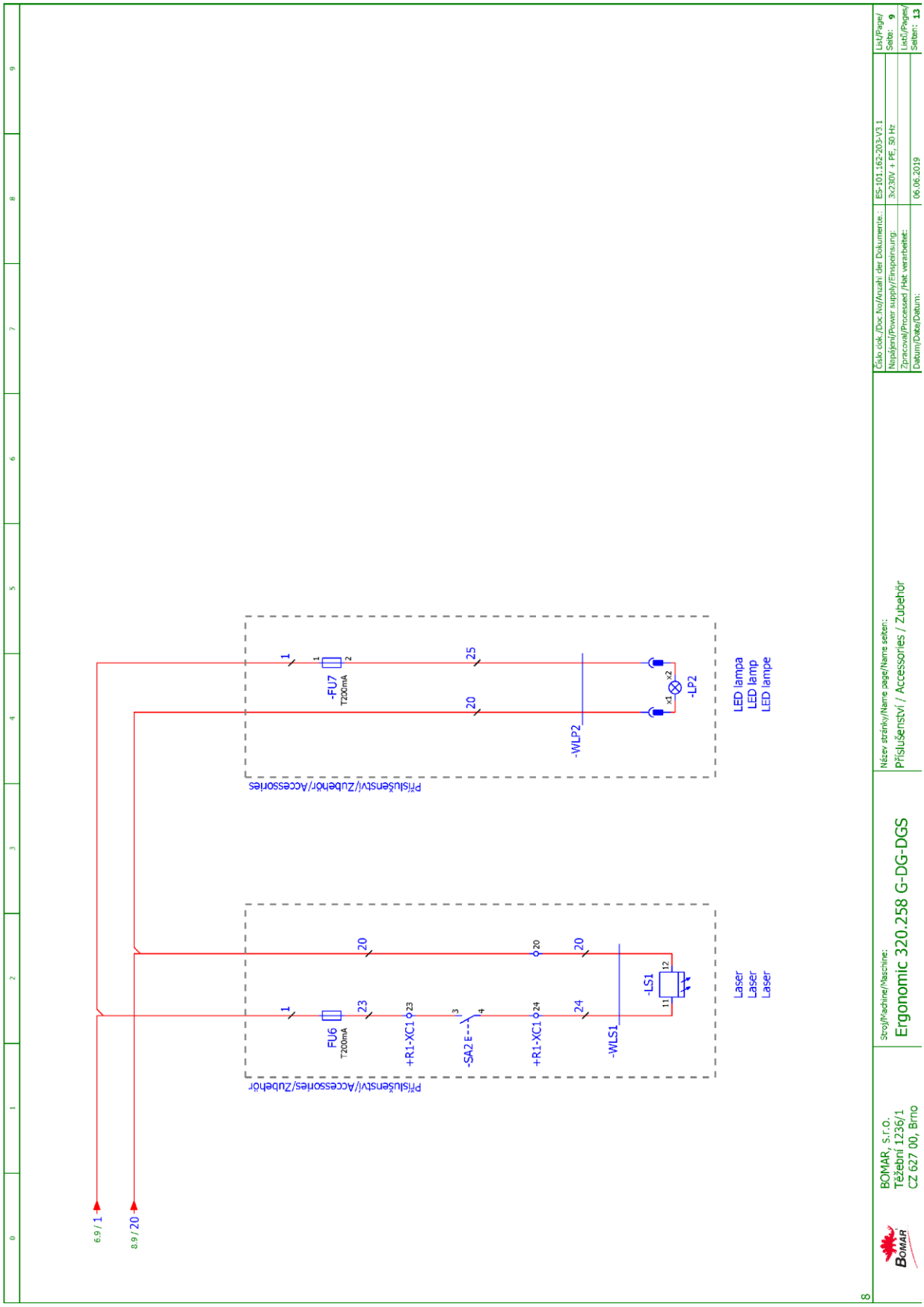
6.9 / 1
8.9 / 20
Příslušenství/Zubehör/Accessories
FU6
T200mA
+R1-XC1
-SA2 E
+R1-XC1
-WLS1
-LS1
Laser
Laser
Laser
Příslušenství/Accessories/Zubehör
-FU7
T200mA
-WLP2
-LP2
LED lampa
LED lamp
LED lampe
Číslo ock./Doc.No/Anzahl der Dokumente: ES-101.162-203-V3.1
Napájení/Power supply/Einspeisung: 3x230V + PE, 50 Hz
Zpracoval/Processed /Hat verarbeitet:
Datum/Date/Datum: 06.06.2019
List/Page/Seite: 9
List/Pages/Seiten: 13
Název stránky/Name page/Name seiten:
Příslušenství / Accessories / Zubehör
Stroj/Machine/Maschine:
Ergonomic 320.258 G-DG-DGS
BOMAR, s.r.o.
Těžební 1236/1
CZ 627 00, Brno
BOMAR

6.3. Elektrické schéma / Elektroschema / Wiring diagrams – – 3x230 V + PE, 50/60 Hz –frekv. měnič / Frequenzumrichter / frequency convertor

Obsah / Table of contents / Inhalt

Strana Page Seite	Název strany Page name Seitenname	Datum Date Datum
/1	Úvodní strana / Start page / Startseite	31.01.2020
/2	Obsah / Table of contents / Inhaltsverzeichnis	31.01.2020
/3	Kusovník artiklů / Parts list / Artikelstückliste	31.01.2020
/3.a	Kusovník artiklů / Parts list / Artikelstückliste	31.01.2020
/3.b	Kusovník artiklů / Parts list / Artikelstückliste	31.01.2020
/3.c	Kusovník artiklů / Parts list / Artikelstückliste	31.01.2020
/3.d	Kusovník artiklů / Parts list / Artikelstückliste	31.01.2020
/4	Rozmístění prvků v rozvaděči R1 / Placement of elements in enclosure R1 / Platzierung der Elemente im Schaltschrank R1	31.01.2020
/5	Rozmístění prvků v ovládacím panelu OP1 / Deployment of elements in control panel OP 1 / Einsatz der Elemente in dem Bedienfeld OP 1	09.03.2016
/6	Silová část / Power part / Feld partie	31.01.2020
/7	Ovládací část / Control part / Betatigungssteurkreis	01.02.2018
/8	Bezpečnostní okruh / Safety circle / Sicherheitsbereich	01.02.2018
/9	Příslušenství / Accessories / Zubehör	06.06.2019

Kusovník artiklů / Parts list / Stückliste

Označení přístroje Device identification Geräteidentifikation	Typ přístroje Device description Gerätebeschreibung	Objednací číslo Type number Typennummer	Výrobce Manufacturer Hersteller	Skladové číslo Part number Lagernummer	Množství Quantity Menge	Umístění Location Stelle
-BM1	Bezpečnostní relé 24VDC, 3NO Safety relay 24VDC, 3NO Sicherheitsrelais 24VDC, 3NO	BT50	ABB	91.051.063	1	/8.6
-FU3	Pojistka trubičková - 2A/250V, pomalá, 5x20 Tube fuse - 2A/250V, slow, 5x20 Rohrsicherung - 2A / 250V, langsam, 5x20	T2A/250V	ESKA	91.230.001	1	/6.9
-SN1	Hlavice potenciometru - 24mm Head of potentiometer 24mm Leiter Potentiometer 24mm	S8877 BLK	GES-ELECTRONICS, a.s.	91.060.063	1	/7.8
-C1	Kondenzátor Condenser Kondensator	2200uF/50V	GM Electronic s.r.o.	91.282.063	1	/6.8
-RCF11	Filtr RFC vývodový Efferent RFC filter Ableitenden RFC Filter	FBOPR1624	Ing. Miroslav Vlček	91.041.015	1	/6.1
-RCF12	Filtr RFC vývodový Efferent RFC filter Ableitenden RFC Filter	FBOPR1624	Ing. Miroslav Vlček	91.041.015	1	/6.1
-FU1	Svorka pojistková Fuse terminal Sicherungsklemme	WK4/THSi5U	WIELAND	91.251.102	1	/4
-FU2	Svorka pojistková Fuse terminal Sicherungsklemme	WK4/THSi5U	WIELAND	91.251.102	1	/4
-FU3	Svorka pojistková Fuse terminal Sicherungsklemme	WK4/THSi5U	WIELAND	91.251.102	1	/6.9
-FU4	Svorka pojistková Fuse terminal Sicherungsklemme	WK4/THSi5U	WIELAND	91.251.102	1	/6.5
-FU4	Pojistka trubičková - 700mA/250V, pomalá, 5x20 Tube fuse - 700mA/250V, slow, 5x20 Rohrsicherung - 700mA / 250V, langsam, 5x20	T700mA/250V	ESKA	91.230.069	1	/6.5
-FU5	Svorka pojistková Fuse terminal Sicherungsklemme	WK4/THSi5U	WIELAND	91.251.102	1	/6.5

The manufacturer reserves right to use an equivalent replacement device.

2

Kusovník artiklů / Parts list / Stückliste

Označení přístroje Device identification Geräteidentifikation	Typ přístroje Device description Gerätebeschreibung	Objednací číslo Type number Typennummer	Výrobce Manufacturer Hersteller	Skladové číslo Part number Lagernummer	Množství Quantity Menge	Umístění Location Stelle
-FU5	Pojistka trubičková - 700mA/250V, pomalá, 5x20 Tube fuse - 700mA/250V, slow, 5x20 Rohrsicherung - 700mA / 250V, langsam, 5x20	T700mA/250V	ESKA	91.230.069	1	/6.5
-FU6	Svorka pojistková Fuse terminal Sicherungsklemme	WK4/THSi5U	WIELAND	91.251.102	1	/4.6
-FU7	Svorka pojistková Fuse terminal Sicherungsklemme	WK4/THSi5U	WIELAND	91.251.102	1	/4.6
-KM11	Ministykač 4kW/400V Minicontactor 4kW/400V Minischutz 4kW/400V	B6S-30-01-1.7-71	ABB	91.040.049	1	/8.8
-KM11	Pomocné kontakty - 1xNO+1xNC Auxiliary contacts - 1xNO+1xNC Hilfskontakte - 1xNO+1xNC	CAF 6-11M	ABB	91.041.042	1	/8.8
-KM12	Ministykač 4kW/400V Minicontactor 4kW/400V Minischutz 4kW/400V	B6S-30-01-1.7-71	ABB	91.040.049	1	/8.9
-KM12	Pomocné kontakty - 1xNO+1xNC Auxiliary contacts - 1xNO+1xNC Hilfskontakte - 1xNO+1xNC	CAF 6-11M	ABB	91.041.042	1	/8.9
-PA1	Pojistkový odpínač pro válcové vložky - 3P Switch fuse for the cylinder inserts - 3P Schalter Sicherung für den Zylindereinsätze - 3P	E 93/32	ABB	91.241.014	1	/4.3
-PA2	Pojistkový odpínač pro válcové vložky - 3P Switch fuse for the cylinder inserts - 3P Schalter Sicherung für den Zylindereinsätze - 3P	E 93/32	ABB	91.241.014	1	/4.5
-QS1	3 pólový odpínač, 16A Disconnector - 3P, 16A Trennschalter - 3P, 16A	OT16FT3	ABB	91.170.018	1	/6.1
-QS1	Kryt svorek Terminal shroud Klemmenabdeckung	OTS40T3	ABB	91.170.017	1	/6.1
-QS1	Rukojeť odpínače - černá Handle switch - black Griffschalter - schwarz	OHBS3RH	ABB	91.180.016	1	/6.1

The manufacturer reserves right to use an equivalent replacement device.

3

Kusovník artiklů / Parts list / Stückliste

Označení přístroje Device identification Geräteidentifikation	Typ přístroje Device description Gerätebeschreibung	Objednací číslo Type number Typennummer	Výrobce Manufacturer Hersteller	Skladové číslo Part number Lagernummer	Množství Quantity Menge	Umístění Location Stelle
-RE1	Patice pro relé Relay socket Relaissockel	CR-PSS	ABB	91.051.048	1	/7.5
-RE1	Paticové relé CR-P Plug-in relay CR-P Stecken Sie in Relais CR-P	CR-P024DC2	ABB	91.051.049	1	/7.5
-RE2	Patice pro relé Relay socket Relaissockel	CR-PSS	ABB	91.051.048	1	/7.8
-RE2	Paticové relé CR-P Plug-in relay CR-P Stecken Sie in Relais CR-P	CR-P024DC2	ABB	91.051.049	1	/7.8
-SA1/1	Kontaktní blok - 1NO Contact block - 1NO Kontaktblock - 1NO	M22-K10	EATON	91.061.022	1	/7.3
-SA1/1	Kontaktní blok - 1NC Contact block - 1NC Kontaktblock - 1NC	M22-K01	EATON	91.061.024	1	/7.6
-SA1/2	Hlavice s otočným přepínačem - 4 polohy Head with rotary switch - 4 positions Kopf mit Drehschalter - 4 Positionen	M22 - WRK4	EATON	91.060.087	1	/7.5
-SA1/2	Upevňovací adaptér Mounting adapter Montageadapter	M22-A4	EATON	91.061.045	1	/7.5
-SA1/2	Kontaktní blok - 1NO Contact block - 1NO Kontaktblock - 1NO	M22-K10	EATON	91.061.022	1	/7.5
-SA1/3	Kontaktní blok - 1NO Contact block - 1NO Kontaktblock - 1NO	M22-K10	EATON	91.061.022	1	/7.6
-SB1	Total stop - hlavice + 2xNC Emergency-stop - button + 2xNC Not-Aus-Pilz - Taster + 2xNC	YW1B-V4E02R	IDEC	91.060.084	1	/8.4
-SN1	Svorka rychloupínací Fastconnect clamp Fast Connect Klemm	WAGO 224-112	WAGO	91.250.009	3	/7.8

The manufacturer reserves right to use an equivalent replacement device.

3.a

Kusovník artiklů / Parts list / Stückliste

Označení přístroje Device identification Geräteidentifikation	Typ přístroje Device description Gerätebeschreibung	Objednací číslo Type number Typennummer	Výrobce Manufacturer Hersteller	Skladové číslo Part number Lagernummer	Množství Quantity Menge	Umístění Location Stelle
-TR1	Toroidní transformátor - 400V/230V/20V 3,5A 185VA Toroidal transformer - 400V / 230V / 20V 3.5A 185 VA Ringkerntransformator - 400V / 230V / 20V 3.5A 185 VA	400V/230V/20V 3,5A 185VA	KARBAN s.r.o.	91.080.041	1	/6.6
-SQ3	Bezpečnostní koncový spínač - 2xNC Safety Limit Switch - 2x NC Sicherheitsendschalter - 2x NC	QKS8	KEDU	91.173.012	1	/8.4
-SQ1	Koncový spínač - 1NC+1NO Limit switch - 1NC+1NO Endschalter - 1NC+1NO	D4N-4A31	OMRON	91.173.007	1	/7.3
-SQ2	Koncový spínač - 1NC+1NO Limit switch - 1NC+1NO Endschalter - 1NC+1NO	D4N-4A31	OMRON	91.173.007	1	/7.4
-FM1	Frekvenční měnič - 1.5kW, 3x230VAC Frequency converter - 1.5kW, 3x230VAC Frequenzumrichter - 1.5kW, 3x230VAC	VFD015EL23A	DELTA ELECTRONICS, INC.	91.012.172	1	/6.2
-DM1	Usměrňovací můstek - 6A,100V Rectifier bridge - 6A, 100V Brückengleichrichter - 6A, 100V	KBU6B	SOS Electronic, spol. s r.o.	91.280.019	1	/6.7
-PA1	Pojistka válcová - 10A, 10x38, CC Tube fuse - 10A, 10x38, CC Rohrsicherung - 10A, 10x38, CC	PRO-FER-ATDR10	Mersen	91.230.080	1	/6.2
-PA1	Pojistkový odpojovač - 3P CC Fuse disconnector - 3P CC Sicherungstrenner - 3P CC	PRO-FER-USCC3	Mersen	91.241.022	1	/6.2
-PA2	Pojistka válcová - 2A, 10x38, CC Tube fuse - 2A, 10x38, CC Rohrsicherung - 2A, 10x38, CC	PRO-FER-ATDR2	Mersen	91.230.079	2	/6.5
-PA2	Pojistkový odpojovač - 2P CC Fuse disconnector - 2P CC Sicherungstrenner - 2P CC	PRO-FER-USCC2	Mersen	91.241.021	1	/6.5
-SB2	Hlavice tlačítka zelená Head green button Head green button	ZB5AA3	TELEMECANIQUE	91.060.014	1	/7.5
-SB3	Hlavice tlačítka černá Button black head Taste Mitesser	ZB5AA2	TELEMECANIQUE	91.060.013	1	/7.6

The manufacturer reserves right to use an equivalent replacement device.

3.b

Kusovník artiklů / Parts list / Stückliste

Označení přístroje Device identification Geräteidentifikation	Typ přístroje Device description Gerätebeschreibung	Objednací číslo Type number Typennummer	Výrobce Manufacturer Hersteller	Skladové číslo Part number Lagernummer	Množství Quantity Menge	Umístění Location Stelle
-SB4	Hlavice prosvětleného tlačítka žlutá The button head backlit yellow Der Knopf Kopf von hinten beleuchtet gelb	ZB5AW35	TELEMECANIQUE	91.060.023	1	/8.7
-SB5	Hlavice tlačítka černá Button black head Taste Mitesser	ZB5AA2	TELEMECANIQUE	91.060.013	1	/7.2
-SN1	Potenciometr 4k7 Potenciometer 4k7 Potenziometer 4k7	TP195 4k7-N20A	TES-Ostrava	91.283.002	1	/7.8
-RCF0	Vstupní odrušovací filtr 10A Inout noise filter 10A Eingangsrauschfilter 10A	10EB15/50/CF15	WIDECOM TECHNOLOGY s.r.o.	91.041.072	1	/6.2

The manufacturer reserves right to use an equivalent replacement device.

3.c

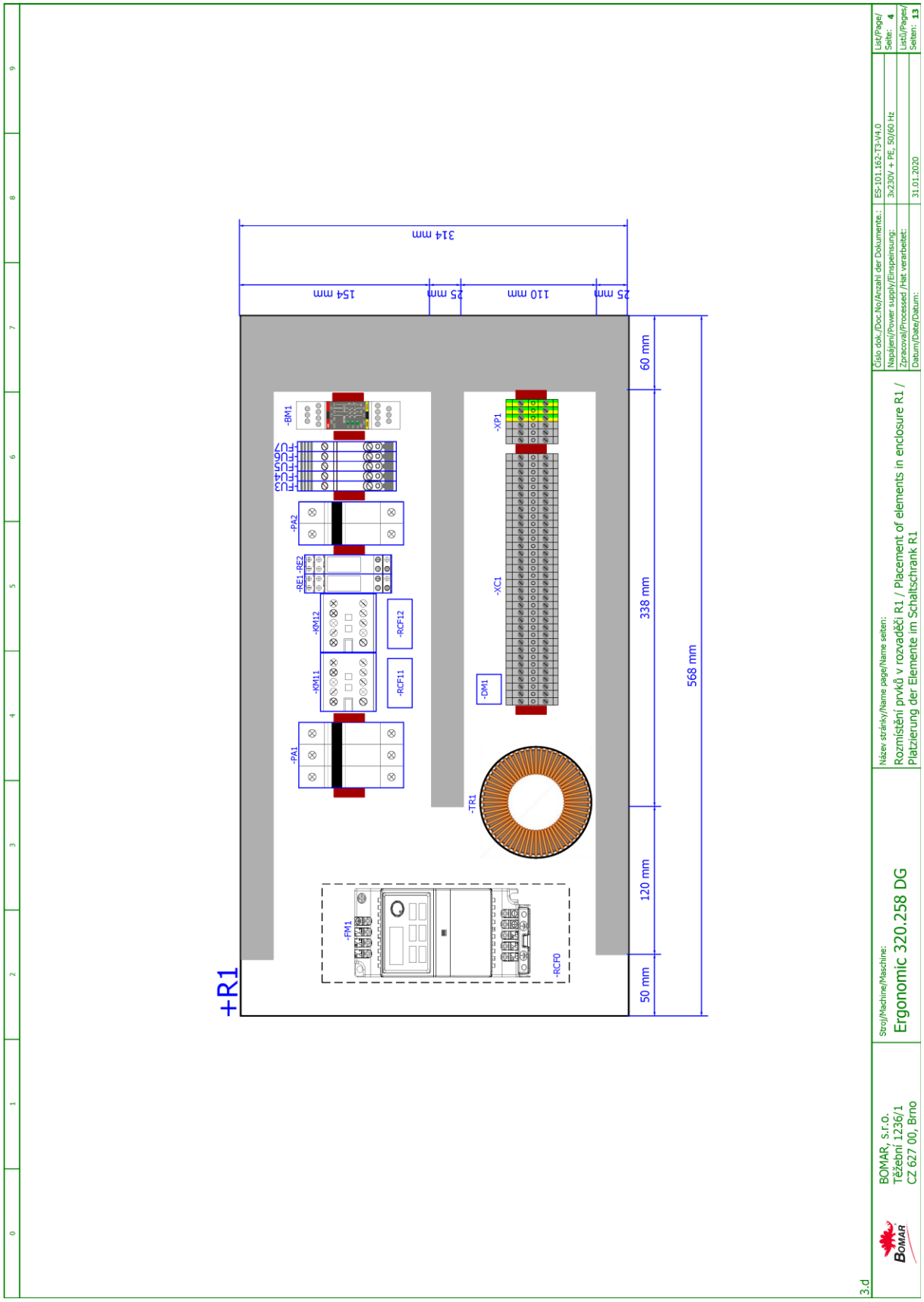
+R1
-FM1
-RCF0
-TR1
-PA1
-KM11
-KM12
-RE1-RE2
-PA2
-BM1
-RCF11
-RCF12
-DM1
-XC1
-XP1
50 mm
120 mm
338 mm
60 mm
568 mm
25 mm
110 mm
25 mm
154 mm
314 mm
Číslo dok./Doc.No/Anzahl der Dokumente.:
ES-101.162-T3-V4.0
Napájení/Power supply/Einspeinsung:
3x230V + PE, 50/60 Hz
Zpracoval/Processed /Hat verarbeitet:
Datum/Date/Datum:
31.01.2020
List/Page/
Seite: 4
Listů/Pages/
Seiten: 13
Název stránky/Name page/Name seiten:
Rozmístění prvků v rozvaděči R1 / Placement of elements in enclosure R1 /
Platzierung der Elemente im Schaltschrank R1
Stroj/Machine/Maschine:
Ergonomic 320.258 DG
BOMAR, s.r.o.
Těžební 1236/1
CZ 627 00, Brno
BOMAR
3.d

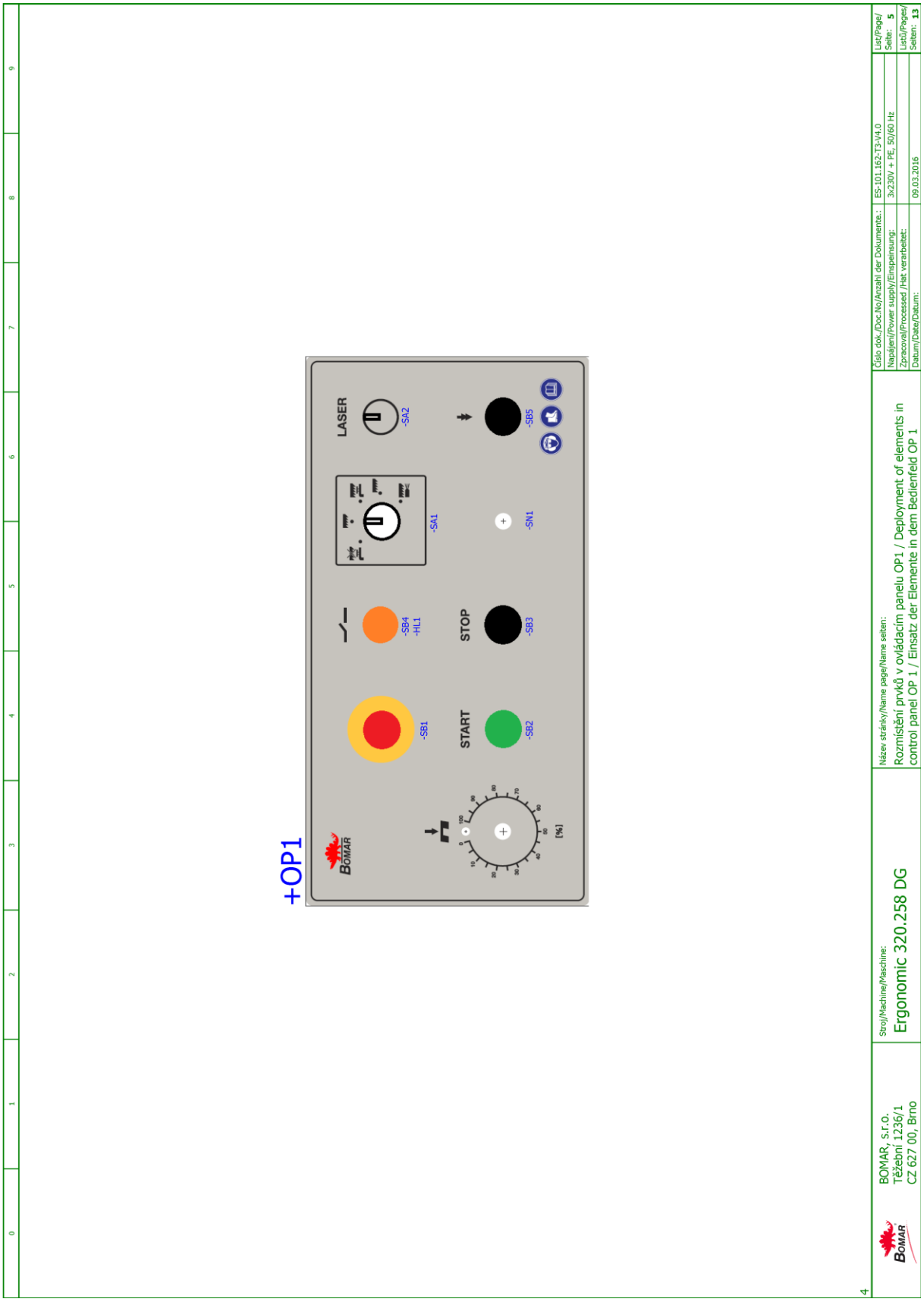
+OP1
BOMAR
-SB1
START
-SB2
STOP
-SB3
-SB4
-HL1
-SA1
LASER
-SA2
-SN1
-SB5
[%]
BOMAR, s.r.o.
Těžební 1236/1
CZ 627 00, Brno
Stroj/Machine/Maschine:
Ergonomic 320.258 DG
Název stránky/Name page/Name seiten:
Rozmístění prvků v ovládacím panelu OP1 / Deployment of elements in control panel OP 1 / Einsatz der Elemente in dem Bedienfeld OP 1
Číslo dok./Doc.No/Anzahl der Dokumente.:
ES-101.162-T3-V4.0
Napájení/Power supply/Einspeisung:
3x230V + PE, 50/60 Hz
Zpracoval/Processed /Hat verarbeitet:
Datum/Date/Datum:
09.03.2016
List/Page/Seite: 5
List5/Pages/Seiten: 13

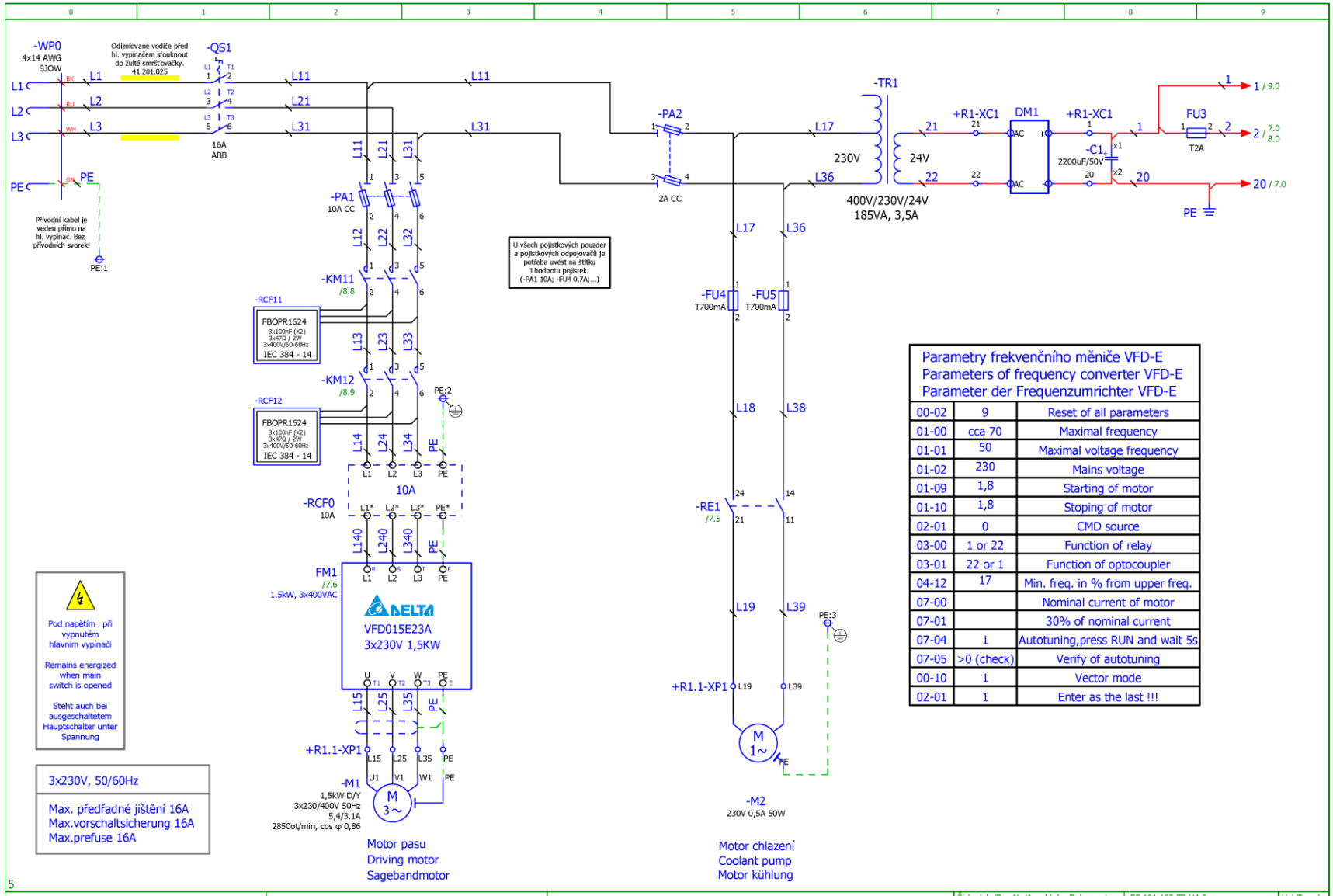

Parametry frekvenčního měniče VFD-E Parameters of frequency converter VFD-E Parameter der Frequenzumrichter VFD-E		
00-02	9	Reset of all parameters
01-00	cca 70	Maximal frequency
01-01	50	Maximal voltage frequency
01-02	230	Mains voltage
01-09	1,8	Starting of motor
01-10	1,8	Stoping of motor
02-01	0	CMD source
03-00	1 or 22	Function of relay
03-01	22 or 1	Function of optocoupler
04-12	17	Min. freq. in % from upper freq.
07-00		Nominal current of motor
07-01		30% of nominal current
07-04	1	Autotuning,press RUN and wait 5s
07-05	>0 (check)	Verify of autotuning
00-10	1	Vector mode
02-01	1	Enter as the last !!!

5

BOMAR, s.r.o.
Těžební 1236/1
CZ 627 00, Brno

Stroj/Machine/Maschine: Ergonomic 320.258 DG

Název stránky/Name page/Name seiten: Silová část / Power part / Feld partie

Číslo dok./Doc.No/Anzahl der Dokumente.:	ES-101.162-T3-V4.0	List/Page/Seite: 6
Napájení/Power supply/Einspeisung:	3x230V + PE, 50/60 Hz	Listů/Pages/Seiten: 13
Zpracoval/Processed /Hat verarbeitet:		
Datum/Date/Datum:	31.01.2020	

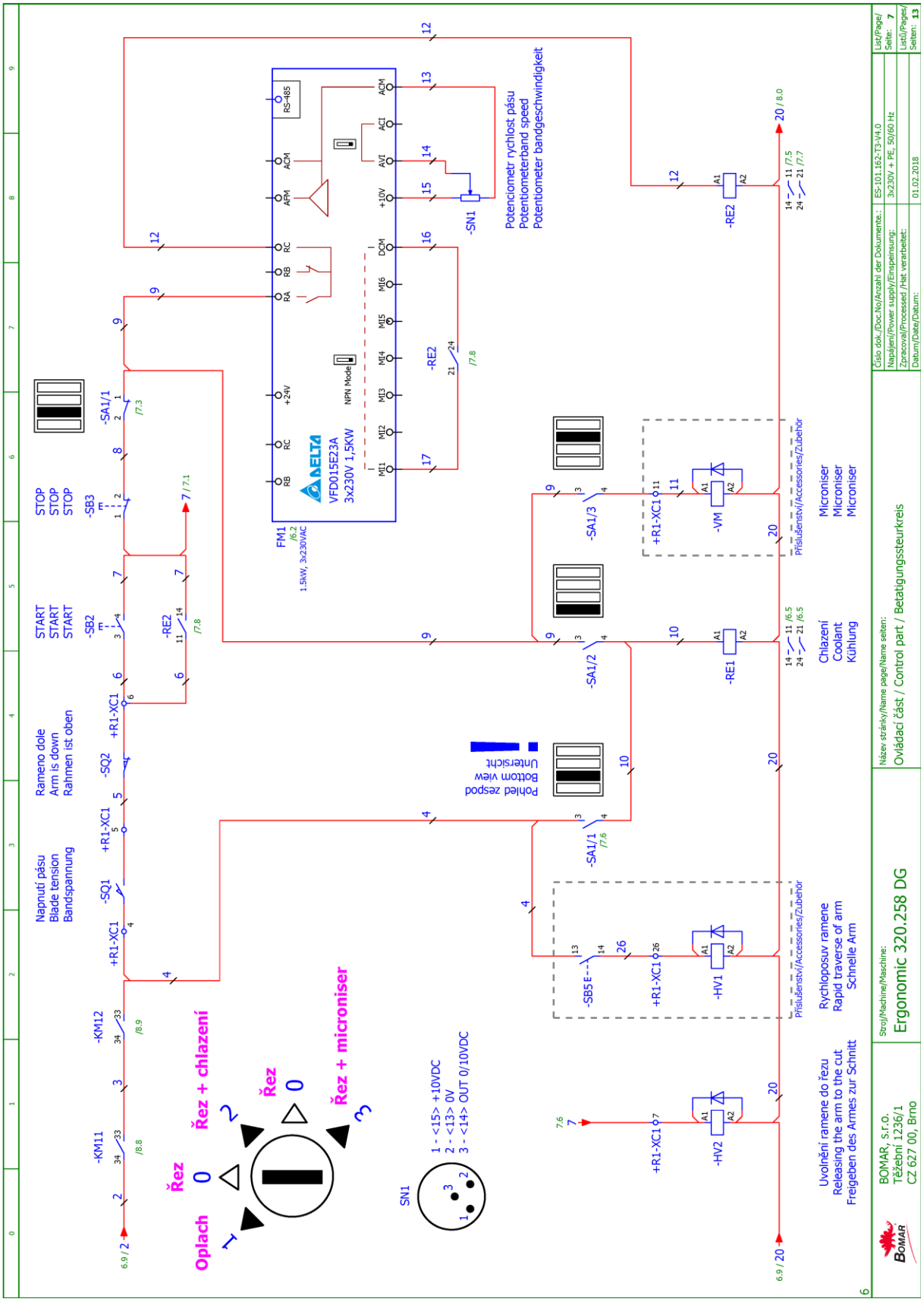
Napnutí pásu
Blade tension
Bandspannung
Rameno dole
Arm is down
Rahmen ist oben
START
START
START
STOP
STOP
STOP
Oplach
Řez
Řez + chlazení
Řez
Řez + microniser
SN1
1 - <15> +10VDC
2 - <13> 0V
3 - <14> OUT 0/10VDC
Pohled zespod
Bottom view
Unterseite
FM1
1.5kW, 3x230VAC
DELTA
VFD015E23A
3x230V 1,5KW
NPN Mode
RS-485
Potenciometr rychlost pásu
Potentiometer band speed
Potentiometer bandgeschwindigkeit
Příslušenství/Accessories/Zubehör
Microniser
Microniser
Microniser
Chlazení
Coolant
Kühlung
Rychloposuv ramene
Rapid traverse of arm
Schnelle Arm
Uvolnění ramene do řezu
Releasing the arm to the cut
Freigeben des Armes zur Schnitt
Číslo dok./Doc.No/Anzahl der Dokumente.: ES-101.162-T3-V4.0
Napájení/Power supply/Einspeisung: 3x230V + PE, 50/60 Hz
Zpracoval/Processed /Hat verarbeitet:
Datum/Date/Datum: 01.02.2018
List/Page/Seite: 7
List5/Pages/Seiten: 13
Název stránky/Name page/Name seiten:
Ovládací část / Control part / Betatigungssteurkreis
Stroj/Machine/Maschine:
Ergonomic 320.258 DG
BOMAR, s.r.o.
Těžební 1236/1
CZ 627 00, Brno

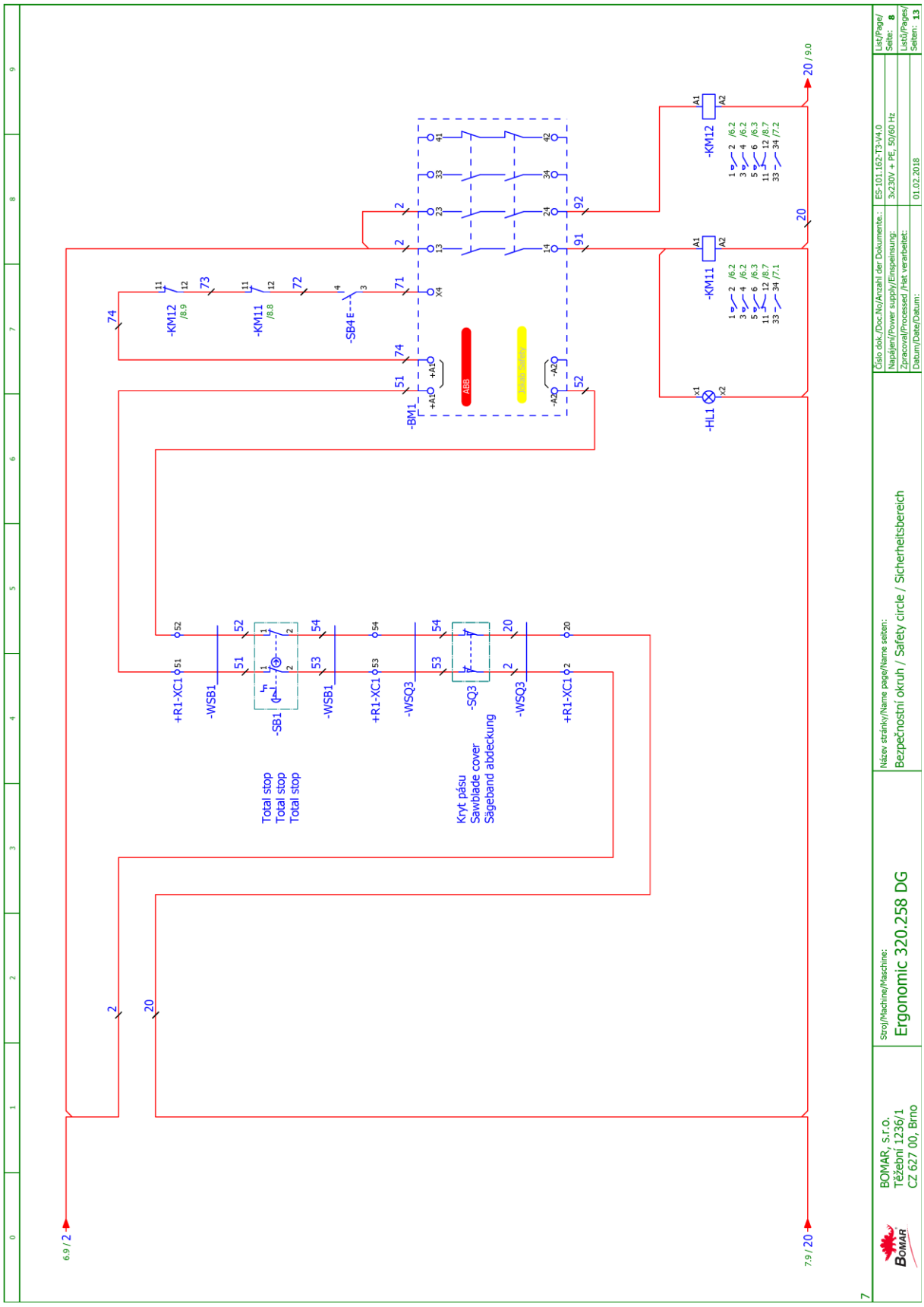
Total stop
Total stop
Total stop
Kryt pásu
Sawblade cover
Sägeband abdeckung
Název stránky/Name page/Name seiten:
Bezpečnostní okruh / Safety circle / Sicherheitsbereich
Stroj/Machine/Maschine:
Ergonomic 320.258 DG
BOMAR, s.r.o.
Těžební 1236/1
CZ 627 00, Brno
Číslo dok./Doc.No/Anzahl der Dokumente:
ES-101.162-T3-V4.0
Napájení/Power supply/Einspeisung:
3x230V + PE, 50/60 Hz
Datum/Date/Datum:
01.02.2018
List/Page/Seite: 8
Listů/Pages/Seiten: 13

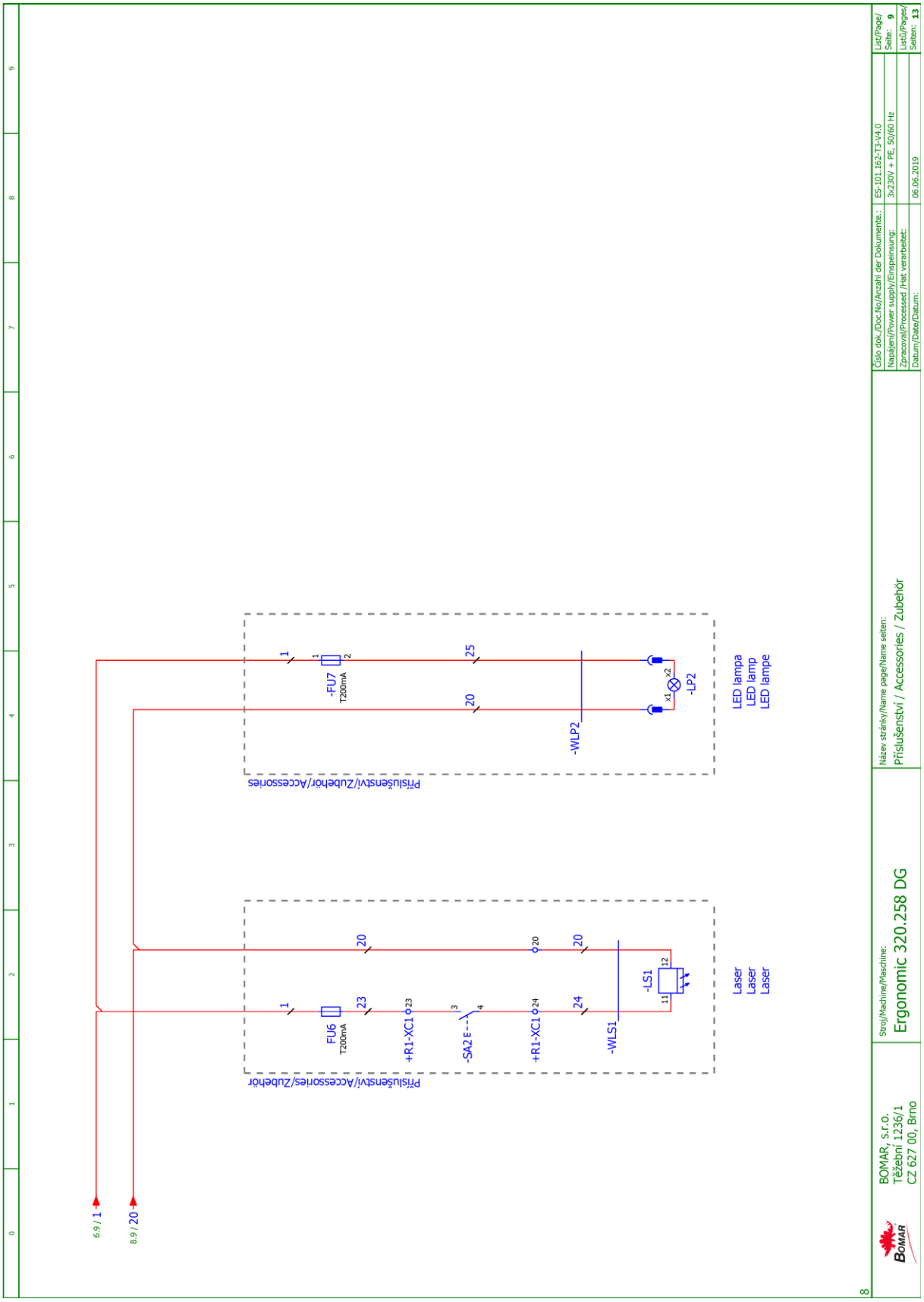
6.9 / 1
8.9 / 20
Příslušenství/Zubehör/Accessories
FU6
T200mA
+R1-XC1
-SA2 E
-WLS1
-LS1
Laser
Laser
Laser
Příslušenství/Zubehör/Accessories
-FU7
T200mA
-WLP2
-LP2
LED lampa
LED lamp
LED lampe
BOMAR, s.r.o.
Těžební 1236/1
CZ 627 00, Brno
Stroj/Machine/Maschine:
Ergonomic 320.258 DG
Název stránky/Name page/Name seiten:
Příslušenství / Accessories / Zubehör
Číslo dok./Doc.No/Anzahl der Dokumente:
ES-101.162-T3-V4.0
Napájení/Power supply/Einspeisung:
3x230V + PE, 50/60 Hz
Zpracoval/Processed /Hat verarbeitet:
Datum/Date/Datum:
06.06.2019
List/Page/
Seite: 9
List5/Pages/
Seiten: 13

6.4. Hydraulické schema / Hydraulisches Schéma / Hydraulic diagram

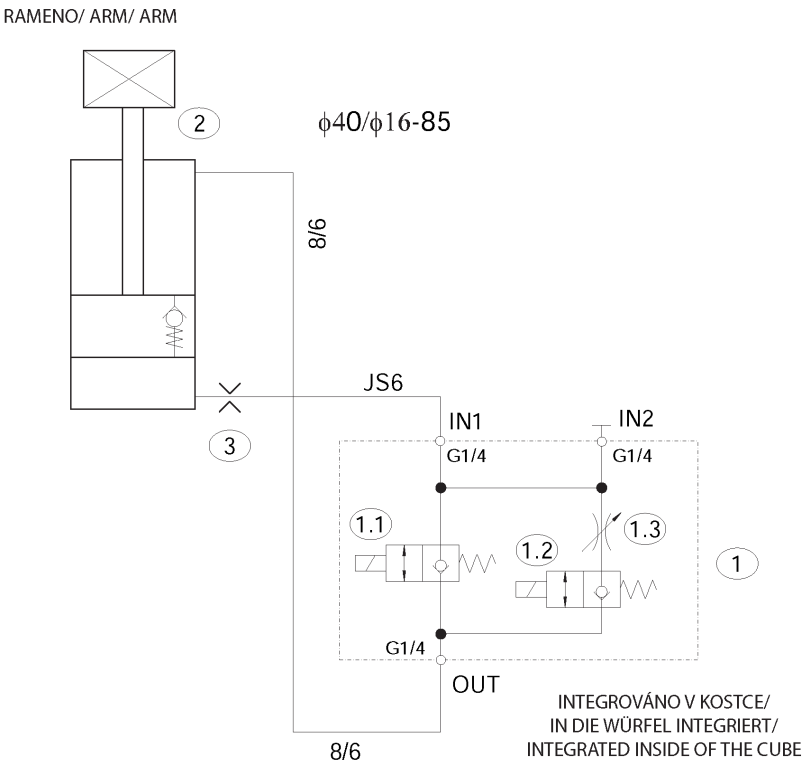

POHYB VZHŮRU MANUÁLNÍ, POHYB DOLŮ VYVOZEN TÍHOU RAMENE
(RAMENO ZAVĚŠENO NA KLOUBU S KOMPENZAČNÍMI PRUŽINAMI)/
BEWEGUNG AUFWÄRTS MANUELL, BEWEGUNG ABWÄRTS MIT DEM GEWICHT
DES ARMES GESHAFT (DAS ARM IST AN DEM GELENK MIT AUSGLEICHSFEDERN GEHÄNGT)
UPWARD MOVEMENT OF THE SAW ARM IS MANUAL, DOWNWARD MOVEMENT IS CAUSED
BY THE WEIGHT OF THE ARM (THE ARM IS HUNG ON A JOINT WITH COMPENSATING SPRINGS)

Elektrický proud procházející cívkami/
Der elektrische Strom, der durch den Spüllen fließt/
Electric current passing through the coils: 0,708 A

Typ / Type / Type	
Ergonomic 320.250 DGS, Ergonomic 275.230 DGS	
Neuvedené světlosti / Unerwähnt Lichtbreite / Unlisted inside diameters	
Hydraulická hadice/ Hydraulikschläuche/ Hydraulic hose	JS6
Pneumatická hadice/ Druckluftschlauch/ Pneumatic hose	8/6

Pmax (ventily/ ventilen/ valves 1.1, 1.2)	10 bar

Poz.	Název položky	Typ	Popis	Poznámka	ks
Pos.	Bezeichnung	Typ	Beschreibung	Hinweis	Menge
Pos.	Item	Type	Description	Note	Pcs.
1	Kostka ventilů / Ventilklotz / Valve cube	92.153.071		f.FMV	1
1.1	Rozvaděč / Schaltschrank / Switchboard	Sedlový / Sitzverteilerventil/ Saddle valve /	Totalstop	Ovlád. napětí / Steuerspannung / Control voltage 24V DC	1
1.2	Rozvaděč / Schaltschrank / Switchboard	Sedlový / Sitzverteilerventil/ Saddle valve	Rychloposuv/ Eilgang / Speed shift	Ovlád. napětí / Steuerspannung / Control voltage 24V DC	1
1.3	Škrtící ventil / Drosselventil / Throttle valve	Jehlový / Nadeldrosselventil/ Needle valve		Rozsah / Anwendungsbereich /Range 0 - 360° (0,1,2…..,7)	1
2	Zdvižný válec / Hubzylinder / Lift cylinder	201.ER257-010	Bomar	Přepouštěcí / Überlaufhubzylinder/ By pass cylinder	1
3	Clona / Schürze / Shield	30.0911-044	Bomar	1mm	1

7. Výkresy sestav pro objednání náhradních dílů / Zeichnungen für Bestellung der Ersatzteile / Drawing assemblies for spare parts order

- Při objednávání náhradních dílů vždy uvádějte: typ stroje (např. Ergonomic 320.258 DG) , výrobní číslo (např. 125) a rok výroby (např. 1999).

- In die Bestellung der Ersatzteile führen Sie immer an: Maschinentyp (z. B. Ergonomic 320.258 DG), Serien Nr. (z. B. 125) und Baujahr (z. B. 1999).

- For spare parts order, you must always to allege: type of machine (for example Ergonomic 320.258 DG), serial number (for example 125, see cover page) and year of construction (for example 1999).

7.1. Ergonomic 320.258 DG

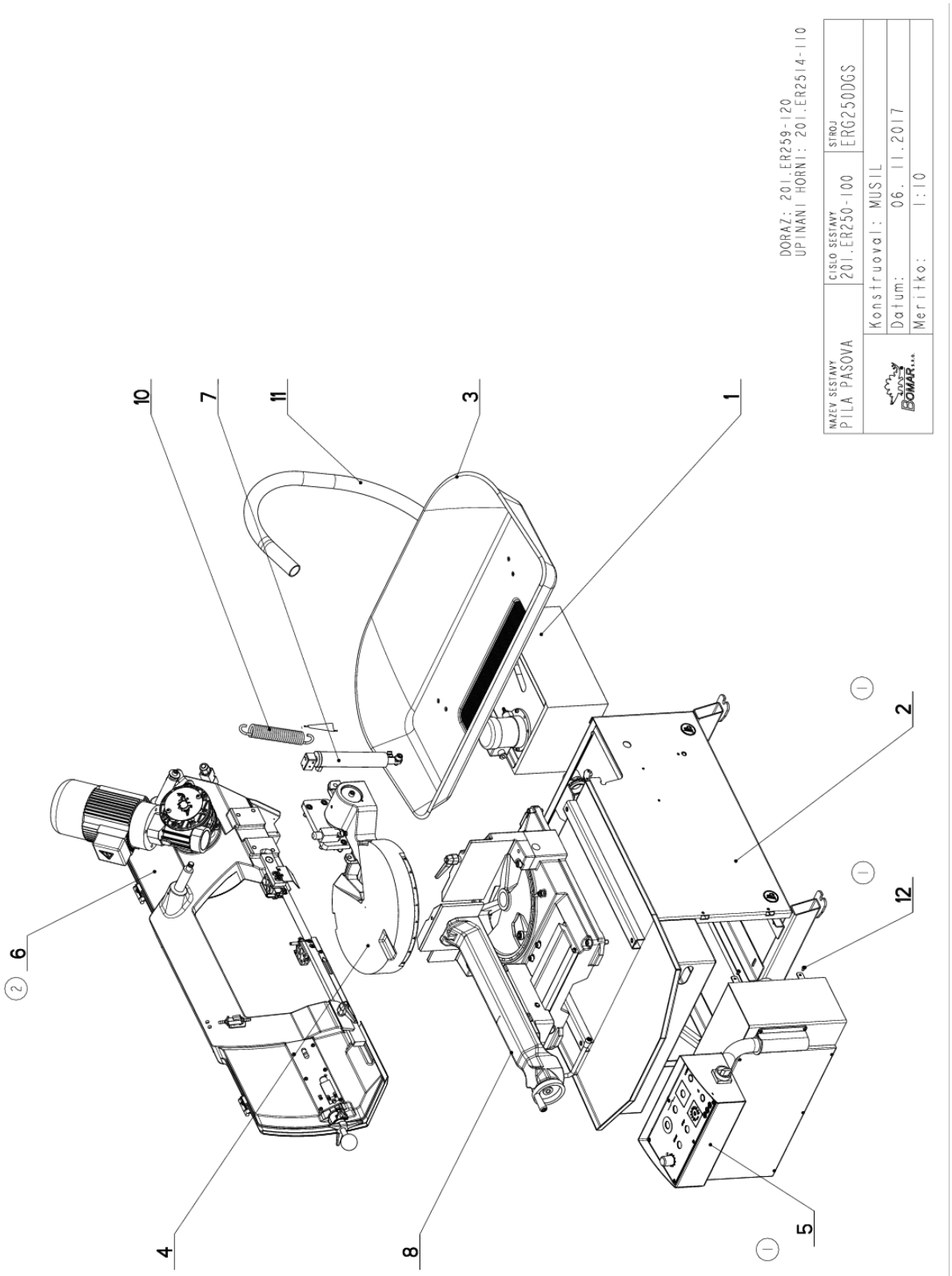

Cislo Sestavy	Ver.	Nazev sestavy
201.ER250-100	2	PILA PASOVA/BAND SAW/BANDSÄGE

Poz.	Objednaci cislo	Ver.	Nazev polozky	Rozmer	Ks
1	201.0506-100	6	CHLAZENI / COOLING / KÜHLUNG		1
2	201.ER251-110 (1)	1	PODSTAVEC / BASE / UNTERSATZ		1
3	201.ER251-302	2	VANA / TANK / WANNE		1
4	201.ER252-100	0	KONZOLA OTOCNA / TURNABLE CONSOL / DREHKONSOLE		1
5	201.ER2530-010 (1)	0	ROZVADEC ELEKTRO / ELECTRO DISTRIBUTOR / SCHALTSCHRANK		1
6	201.ER254-100 (2)	0	RAMENO / SAW ARM / SÄGERAHMEN		1
7	201.ER257-010	3	VALEC ZVEDACI / LIFTING CYLINDER / HEBEZYLINDER		1
8	201.ER259-100	1	STUL / TABLE / TISCH		1
9	30.ER299-001	0	STITEK TYPOVY / MACHINE LABEL / MASCHINE SCHILD	P 0.5x65	1
10	31.ER254-006	0	PRUZINA / SPRING / FEDER	d 6,3	1
11	41.001.005	0	HADICE / HOSE / SCHLAUCH	PG36	1
12	90.013.27.007 (1)	0	SROUB PULKULATY / HALF ROUND BOLT / HALBRUNDSCHRAUBE	M6X10	4
13	99.900.040	0	SAMOLEPKA / STICKER / AUFKLEBER		1
14	99.900.045	0	SAMOLEPKA / STICKER / AUFKLEBER		2
15	99.900.053	0	SAMOLEPKA / STICKER / AUFKLEBER		1
16	99.900.068	0	SAMOLEPKA / STICKER / AUFKLEBER	pouziti vysokozvizneno vozikku	4

1.ZRUS.PODSTAVEC 201.ER251-100 A NAHR. 201.ER251-110,ZRUS.OVLADACI. PANEL 201.0513-340,NAHR.ROZVADECEM 201.ER2530-010, PRID.2xSROUB M6x10 90.013.27.007. 072/ZM148 13.6.2017 SLEZACKOVA
2.ZRUS. RAMENO 201.ER254-000 A NAHR. 201.ER254-100 127/ZM166 24.4.2019 IVICIC

Cislo Sestavy/Number of assembly/Nummer der Baugruppe; Verze (Ver.)/Version/Version; Nazev sestavy/Assembly title/Name der Baugruppe; Pozice (Poz.)/Position/Position; Objednaci cislo/Purchase order number/Bestellnummer; Nazev polozky/Volume title/Name der Position; Rozmer/Stock size/Abmessung

7.3. Ergonomic 320.258 DG

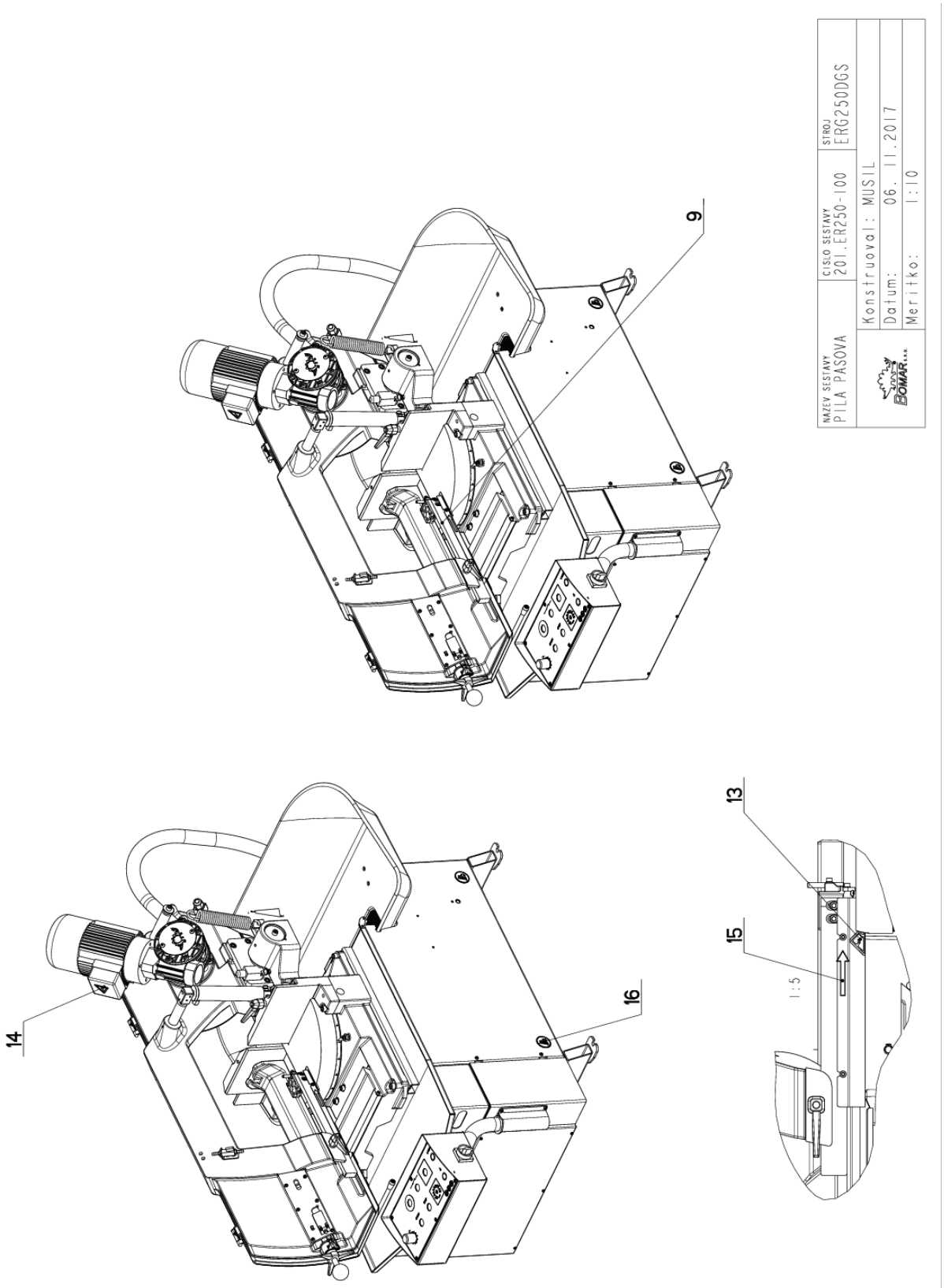

7.4. Kusovník / Piece list / Stückliste - Ergonomic 320.258 DG

Cislo Sestavy	Ver.	Nazev sestavy
201.ER250-100	2	PILA PASOVA/BAND SAW/BANDSÄGE

Poz.	Objednaci cislo	Ver.	Nazev polozky	Rozmer	Ks
1	201.0506-100	6	CHLAZENI / COOLING / KÜHLUNG		1
2	201.ER251-110 (1)	1	PODSTAVEC / BASE / UNTERSATZ		1
3	201.ER251-302	2	VANA / TANK / WANNE		1
4	201.ER252-100	0	KONZOLA OTOCNA / TURNABLE CONSOL / DREHKONSOLE		1
5	201.ER2530-010 (1)	0	ROZVADEC ELEKTRO / ELECTRO DISTRIBUTOR / SCHALTSCHRANK		1
6	201.ER254-100 (2)	0	RAMENO / SAW ARM / SÄGERAHMEN		1
7	201.ER257-010	3	VALEC ZVEDACI / LIFTING CYLINDER / HEBEZYLINDER		1
8	201.ER259-100	1	STUL / TABLE / TISCH		1
9	30.ER299-001	0	STITEK TYPOVY / MACHINE LABEL / MASCHINE SCHILD	P 0.5x65	1
10	31.ER254-006	0	PRUZINA / SPRING / FEDER	d 6,3	1
11	41.001.005	0	HADICE / HOSE / SCHLAUCH	PG36	1
12	90.013.27.007 (1)	0	SROUB PULKULATY / HALF ROUND BOLT / HALBRUNDSCHRAUBE	M6X10	4
13	99.900.040	0	SAMOLEPKA / STICKER / AUFKLEBER		1
14	99.900.045	0	SAMOLEPKA / STICKER / AUFKLEBER		2
15	99.900.053	0	SAMOLEPKA / STICKER / AUFKLEBER		1
16	99.900.068	0	SAMOLEPKA / STICKER / AUFKLEBER	pouziti vysokozvizneno vozikku	4

1.ZRUS.PODSTAVEC 201.ER251-100 A NAHR. 201.ER251-110,ZRUS.OVLADACI. PANEL 201.0513-340,NAHR.ROZVADECEM 201.ER2530-010, PRID.2xSROUB M6x10 90.013.27.007. 072/ZM148 13.6.2017 SLEZACKOVA
2.ZRUS. RAMENO 201.ER254-000 A NAHR. 201.ER254-100 127/ZM166 24.4.2019 IVICIC

Cislo Sestavy/Number of assembly/Nummer der Baugruppe; Verze (Ver.)/Version/Version; Nazev sestavy/Assembly title/Name der Baugruppe; Pozice (Poz.)/Position/Position; Objednaci cislo/Purchase order number/Bestellnummer; Nazev polozky/Volume title/Name der Position; Rozmer/Stock size/Abmessung

7.5. Chlazení / Cooling / Kühlung

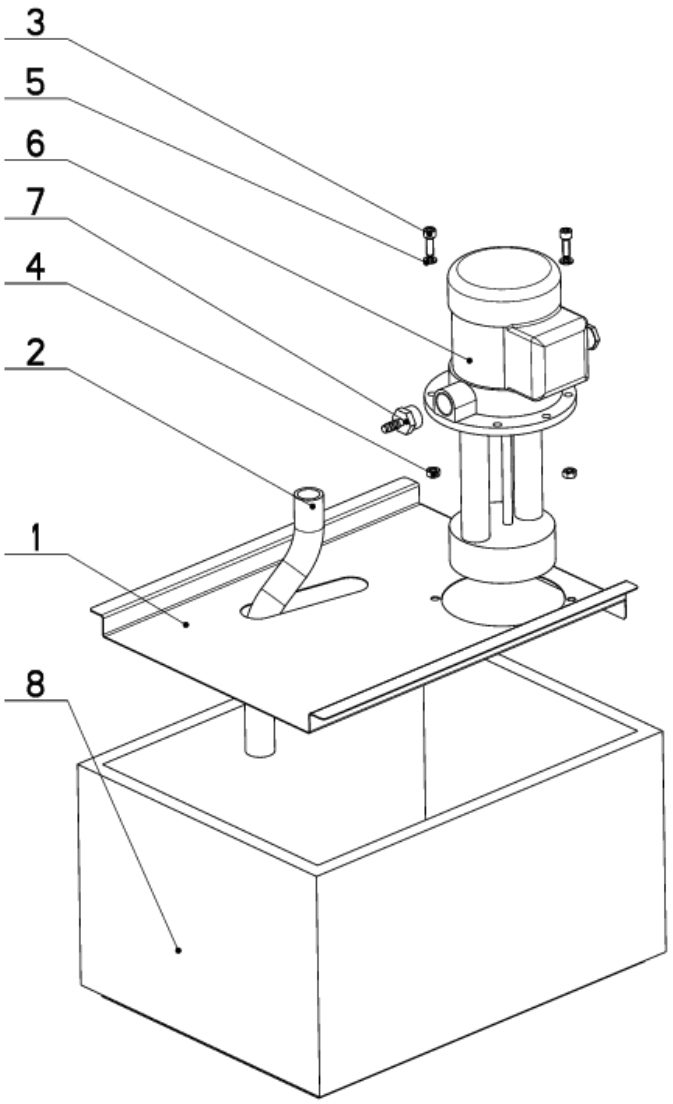

NAZEV SESTAVY	CISLO SESTAVY	STROJ
CHLAZENI	201.0506-100	ERGO250

Konstruoval:	NEUMANN
Datum:	15. 08.2018
Meritko:	1:5

Cislo Sestavy	Ver.	Nazev sestavy
201.0506-100	6	CHLAZENI/COOLING/KÜHLUNG

Poz.	Objednaci cislo	Ver.	Nazev polozky	Rozmer	Ks
1	30.8006-501 (5)	2	VIKO / COVER / DECKEL	P 0,8 x329	1
2	42.020.003	0	HADICE / HOSE / SCHLAUCH	19x3	1
3	90.001.25.076 (6)	0	SROUB IMBUS / ALLEN HEAD BOLT / IMBUSSCHRAUBE	M6X18	2
4	90.100.55.004 (6)	0	MATICE / NUT / MUTTER	MATICE _ M6	2
5	90.152.50.001 (6)	0	PODL VEJIROVA ZN / /	6.4	2
6	91.020.035 (4)	0	CERPADLO CHLAZENI / COOLING PUMP / KÜHLMITTELPUMPE	230/400V	1
7	94.202.020 (4)	0	REDUKCE / REDUCTION / ADAPTOR / REDUKTION	1/2"-6	1
8	94.403.003	0	NADRZ / CONTAINER / BEHALTER		1

1.ZRUS.CERPADLO 91.020.005 A NAHR.91.020.019,ZRUS.VIKO 30.0506-201 A NAHR.30.8006-301,ZRUS.SOUC.30.0506-003, 90.100.55.004,94.202.005,42.020.001,99.260.001,94.202.002. 299/ZM274 12.11.2013 SLEZACKOVA

2.PRIDANO SITO 30.8006-002. 024/ZM100 27.4.2016 SLEZACKOVA

3.ZRUSEN DRZAK 30.8006-002 A NAHR.30.ER251-014. 155/ZM281 16.9.2016 SLEZACKOVA

4.ZRUS.CERPADLO 91.020.019 A NAHR.91.020.035,ZRUS.VIKO 30.8006-301 A NAHR.30.8006-401,ZRUS.DRZAK 30.ER251-014, PRID.REDUKCE 94.202.020,4xPODLOZKA 6,4(90.152.50.001),4xMATICE M6(90.100.55.004),4xSROUB M6x18(90.001.25.076) 112/ZM151 19.4.2017 SLEZACKOVA

5.ZRUSENO VIKO 30.8006-401 A NAHR.30.8006-501.127/ZM172 10.5.2017 SLEZACKOVA

6.ZM. POCTU ZE 4 DILU SROUBENI NA 2: 90.001.25.076, 90.100.55.004, 90.152.50.001. 159/ZM284 15.8.2018 SZABARI

Cislo Sestavy/Number of assembly/Nummer der Baugruppe; Verze (Ver.)/Version/Version; Nazev sestavy/Assembly title/Name der Baugruppe; Pozice (Poz.)/Position/Position; Objednaci cislo/Purchase order number/Bestellnummer; Nazev polozky/Volume title/Name der Position; Rozmer/Stock size/Abmessung

7.7. Podstavec / Base / Untersatz

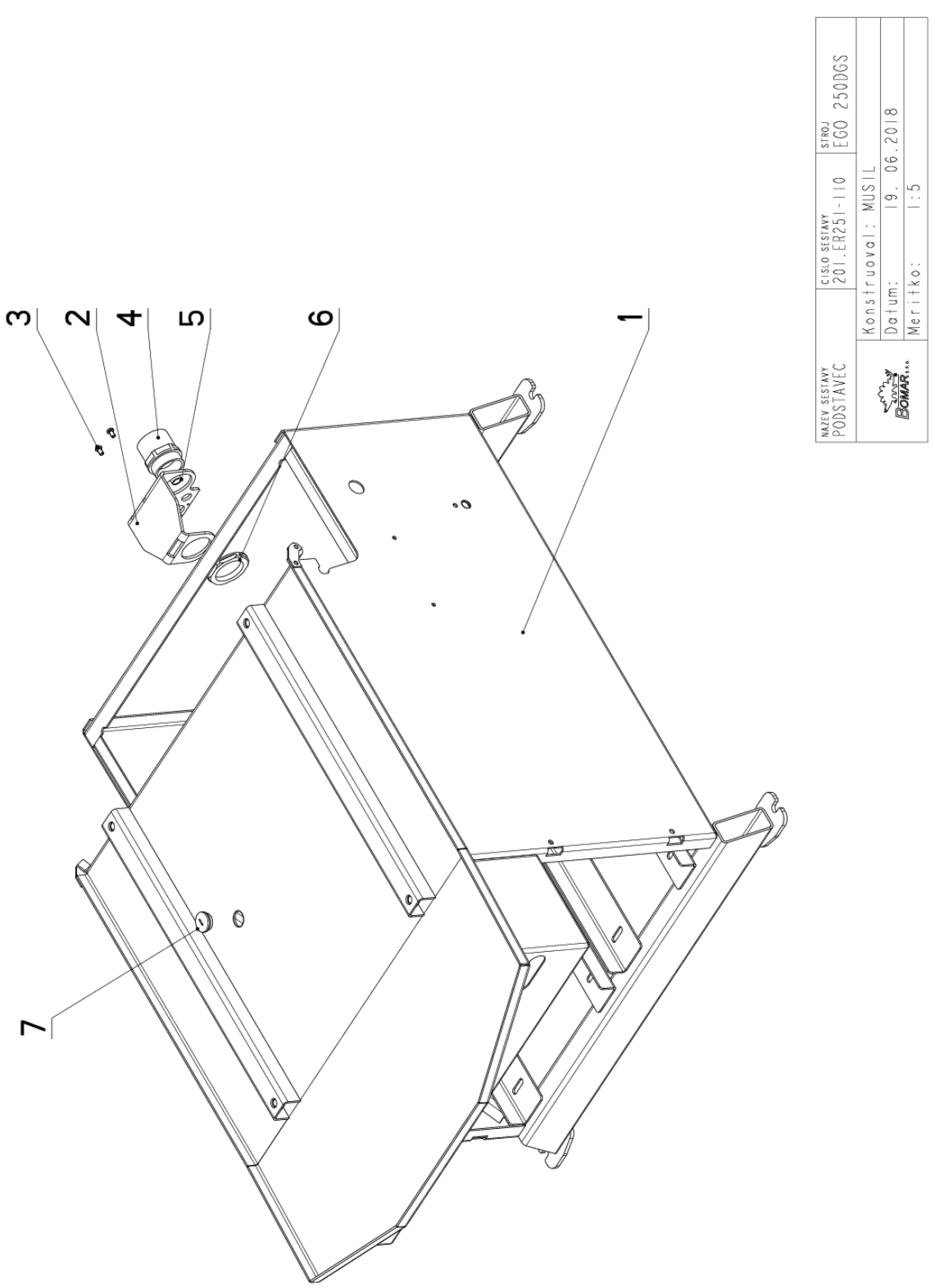

7.8. Kusovník / Piece list / Stückliste - Podstavec / Base / Untersatz

Cislo Sestavy	Ver.	Nazev sestavy
201.ER251-110	1	PODSTAVEC/BASE/UNTERSATZ

Poz.	Objednaci cislo	Ver.	Nazev polozky	Rozmer	Ks
1	30.ER251-111	2	PODSTAVEC / BASE / UNTERSATZ		1
2	30.ER251-604	1	DRZAK / HOLDER / HALTER	P4x110	1
3	90.013.27.007	0	SROUB PULKULATY / HALF ROUND BOLT / HALBRUNDSCHRAUBE	M6X10	2
4	91.071.005	0	PRUCHODKA / LEADTHROUGH / DURCHFÜHRUNG		1
5	91.071.015	0	VYVODKA / BUSHING / TÜLLE		1
6	91.072.008	0	MATICE / NUT / MUTTER		1
7	91.074.013 (1)	0	UCPAVKA / PLUG / STOPFEN	M25x1,5	1

1.PRIDANA UCPAVKA 91.074.013. 219/ZM315 18.10.2017 SLEZACKOVA

Cislo Sestavy/Number of assembly/Nummer der Baugruppe; Verze (Ver.)/Version/Version; Nazev sestavy/Assembly title/Name der Baugruppe; Pozice (Poz.)/Position/Position; Objednaci cislo/Purchase order number/Bestellnummer; Nazev polozky/Volume title/Name der Position; Rozmer/Stock size/Abmessung

7.9. Vana/ Tank/ Wanne

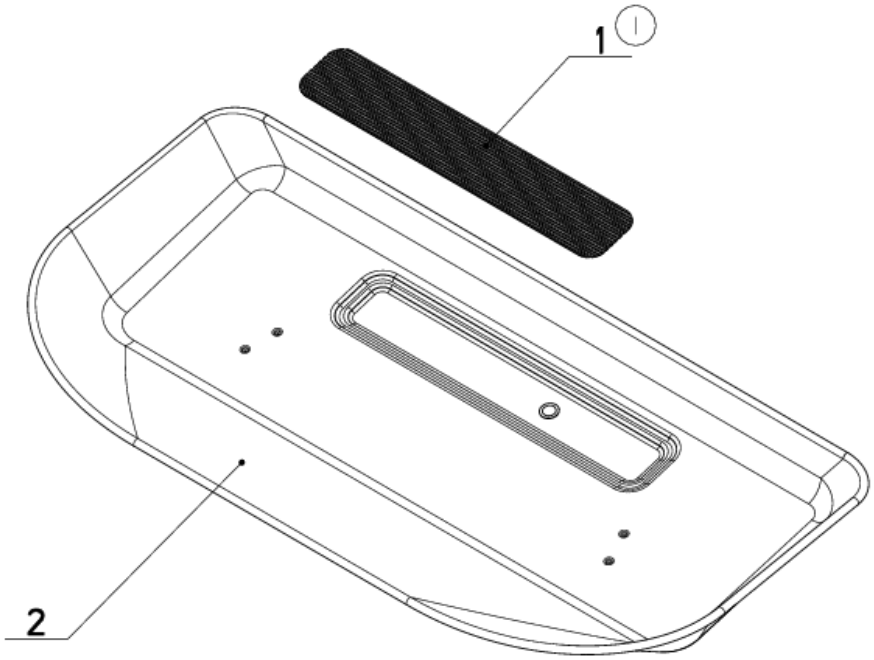

NAZEV SESTAVY	CISLO SESTAVY	STROJ
VANA	201.ER251-302	ERGO.250

Konstruoval:	FABER
Datum:	23. 10.2017
Meritko:	13:100

7.10. Kusovník / Piece list / Stückliste - Vana/ Tank/ Wanne

Cislo Sestavy	Ver.	Nazev sestavy
201.ER251-302	2	VANA/TANK/WANNE

Poz.	Objednaci cislo	Ver.	Nazev polozky	Rozmer	Ks
1	30.ER251-304 (1)	0	SITO / SIEVE / GITTERWERK	P1x95	1
2	30.ER251-305	1	VANA / TANK / WANNE		1

1.PRIDAN KROUZEK 20x2(96.002.046),PODLOZKA 20(90.167.00.001),ZRUS.VANA 31.ER251-302.1 A NAHR.30.ER251-305. 213/ZM177 9.6.2016 SLEZACKOVA

2.ZRUS.TRUBKA 30.ER251-303,PODLOZKA 90.167.00.001,KROUZEK 96.002.046. 265/ZM345 21.10.2016 SLEZACKOVA

Cislo Sestavy/Number of assembly/Nummer der Baugruppe; Verze (Ver.)/Version/Version; Nazev sestavy/Assembly title/Name der Baugruppe; Pozice (Poz.)/Position/Position; Objednaci cislo/Purchase order number/Bestellnummer; Nazev polozky/Volume title/Name der Position; Rozmer/Stock size/Abmessung

7.11. Konzola otočná / Turnable consol / Drehkonsole

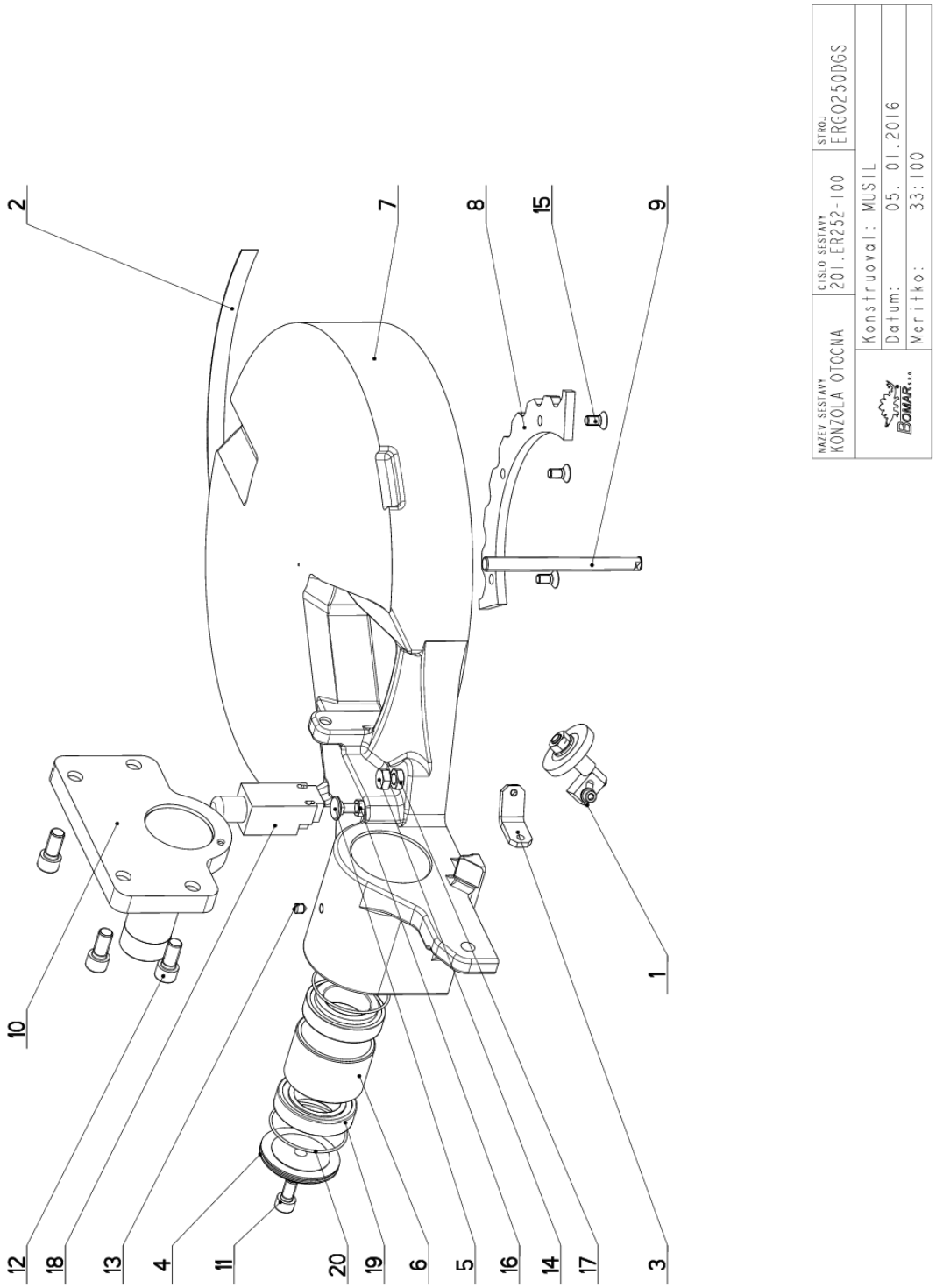

7.12. Kusovník / Piece list / Stückliste - Konzola otočná / Turnable consol / Drehkonsole

Cislo Sestavy	Ver.	Nazev sestavy
201.ER252-100	0	KONZOLA OTOCNA/TURNABLE CONSOL/DREHKONSOLE

Poz.	Objednaci cislo	Ver.	Nazev polozky	Rozmer	Ks
1	201.0704-100	0	KARTAC / BRUSH / BÜRSTE		1
2	30.0502-605	0	MERITKO / MEASURE / SKALA	P 0.5 x15	1
3	30.0514-603	0	DRZAK / HOLDER / HALTER	P 5x20	1
4	30.0702-012	0	VIKO / COVER / DECKEL	d 70	1
5	30.0702-013	0	SROUB / BOLT / SCHRAUBE	M8	1
6	30.8002-403	0	POUZDRO / SLEEVE / BÜCHSE	TR 70x5	1
7	30.ER252-101	0	KONZOLA OTOCNA / TURNABLE CONSOL / DREHKONSOLE		1
8	30.ER252-102	0	SEGMENT / SEGMENT / SEGMENT	P 8x105	1
9	30.ER252-103	0	SROUB / BOLT / SCHRAUBE	M12	1
10	30.ER252-114	0	KONZOLA / CONSOLE / KONSOLE		1
11	90.001.25.046	0	SROUB IMBUS / ALLEN HEAD BOLT / IMBUSSCHRAUBE	M10X20	1
12	90.001.25.057	0	SROUB IMBUS / ALLEN HEAD BOLT / IMBUSSCHRAUBE	M12x25	4
13	90.003.2D.010	0	SROUB STAVECI / ADJUSTMENT BOLT / STELLSCHRAUBE	SROUB M8X10	1
14	90.005.55.024	0	SROUB 6HRANNY / 6 SIDED BOLT / SECHSKANTSCHRAUBE	SROUB M10X25	1
15	90.011.27.012	0	SROUB ZAPUSTNY / COUNTERSINK BOLT / SENKSCHRAUBE	SROUB M8X16	3
16	90.101.55.001	0	MATICE / NUT / MUTTER	MATICE M8	1
17	90.101.55.002	0	MATICE / NUT / MUTTER	MATICE M10	1
18	91.173.007	0	SPINAC KONCOVY / END SWITCH / ENDSCHALTER		1
19	95.300.002	0	LOZISKO KUZELIK / BEARING / LAGER	32008AX	2
20	96.001.018	0	TESNENI / SEALING / DICHTUNG		2

Cislo Sestavy/Number of assembly/Nummer der Baugruppe; Verze (Ver.)/Version/Version; Nazev sestavy/Assembly title/Name der Baugruppe; Pozice (Poz.)/Position/Position; Objednaci cislo/Purchase order number/Bestellnummer; Nazev polozky/Volume title/Name der Position; Rozmer/Stock size/Abmessung

7.13. Kartáč / Brush / Bürste

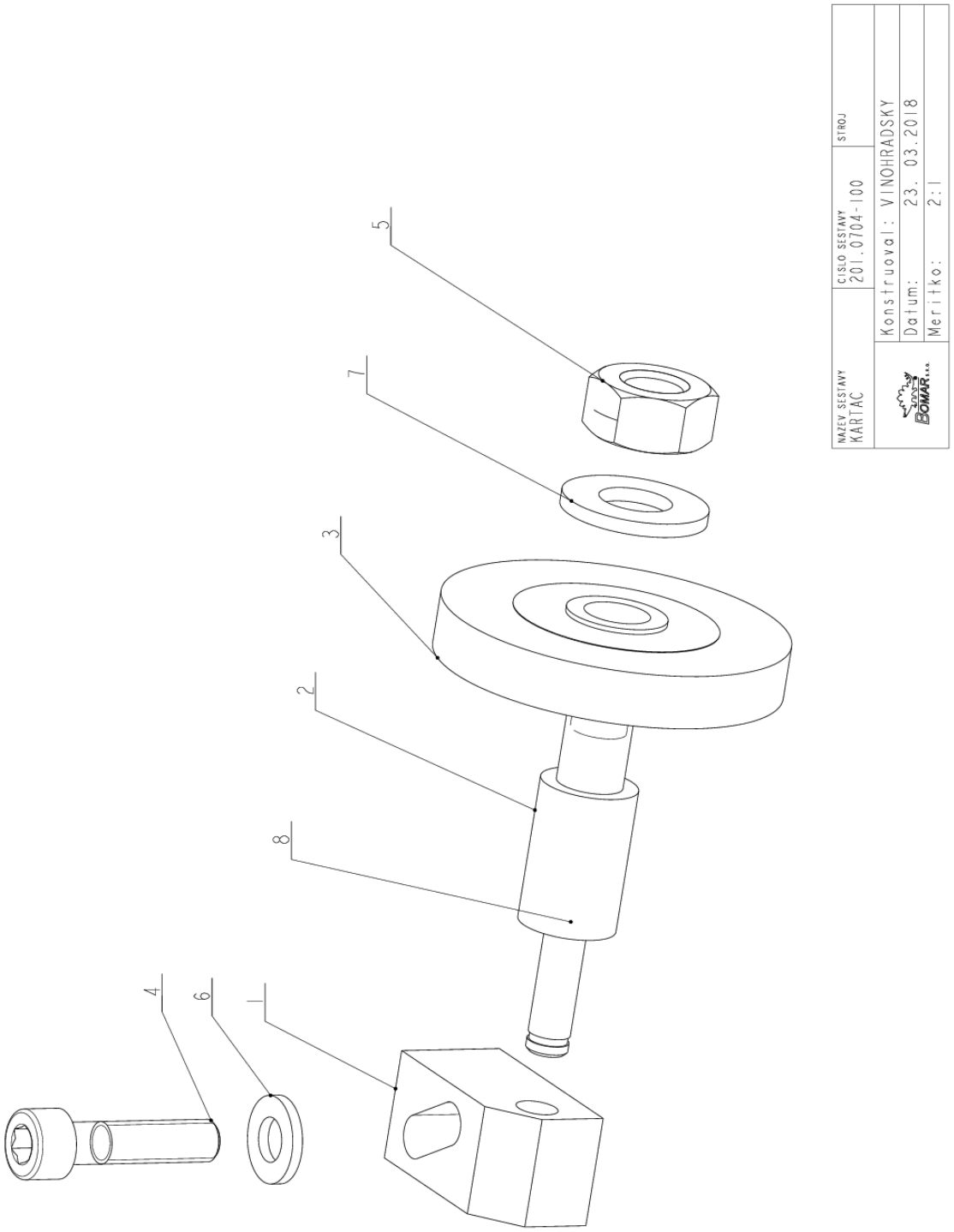

7.14. Kusovník / Piece list / Stückliste - Kartáč / Brush / Bürste

Cislo Sestavy 201.0704-100		Ver. 0	Nazev sestavy KARTAC/BRUSH/BÜRSTE		
Poz.	Objednaci cislo	Ver.	Nazev polozky	Rozmer	Ks
1	30.0104-022	0	DRZAK / HOLDER / HALTER	HR 16x16	1
2	30.0704-029	0	HRIDEL / SHAFT / WELLE	d 14	1
3	31.0704-031	0	KARTAC / BRUSH / BÜRSTE	D 50/ d 9.5	1
4	90.001.25.019	0	SROUB IMBUS / ALLEN HEAD BOLT / IMBUSSCHRAUBE	M6X25	1
5	90.100.55.006	0	MATICE / NUT / MUTTER	MATICE _ M10	1
6	90.150.50.004	0	PODLOZKA / WASHER / UNTERLEGSCHEIBE	PODLOZKA 6,4	1
7	90.150.50.006	0	PODLOZKA / WASHER / UNTERLEGSCHEIBE	PODLOZKA 10,5	1
8	95.800.001	0	KROUZEK POJIST.VNEJS / OUTSIDE SAFETY RING / SICHERUNGSRING AUßEN	POJISTNY KROUZEK 6	1

Cislo Sestavy/Number of assembly/Nummer der Baugruppe; Verze (Ver.)/Version/Version; Nazev sestavy/Assembly title/Name der Baugruppe; Pozice (Poz.)/Position/Position; Objednaci cislo/Purchase order number/Bestellnummer; Nazev polozky/Volume title/Name der Position; Rozmer/Stock size/Abmessung

7.15. Rozvaděč elektro / Electro distributor / Schaltschrank

Cislo Sestavy
201.ER2530-010

Ver.
0

Nazev sestavy
ROZVADEC ELEKTRO/ELECTRO DISTRIBUTOR/SCHALTSCHRANK

Poz.	Objednaci cislo	Ver.	Nazev polozky	Rozmer	Ks
1	201.0513-340	1	OVLADACI PANEL / CONTROL PANEL / BEDIENPULT		1
2	30.0513-304	4	PANEL / PANEL / PANEL	P 1,5x314	1
3	30.ER2530-011	0	ROZVADEC ELEKTRO / ELECTRO DISTRIBUTOR / SCHALTSCHRANK		1
4	30.ER2530-012	0	VIKO / COVER / DECKEL		1
5	91.071.022	0	VYVODKA / BUSHING / TÜLLE		1
6	91.072.016	0	MATICE / NUT / MUTTER		1

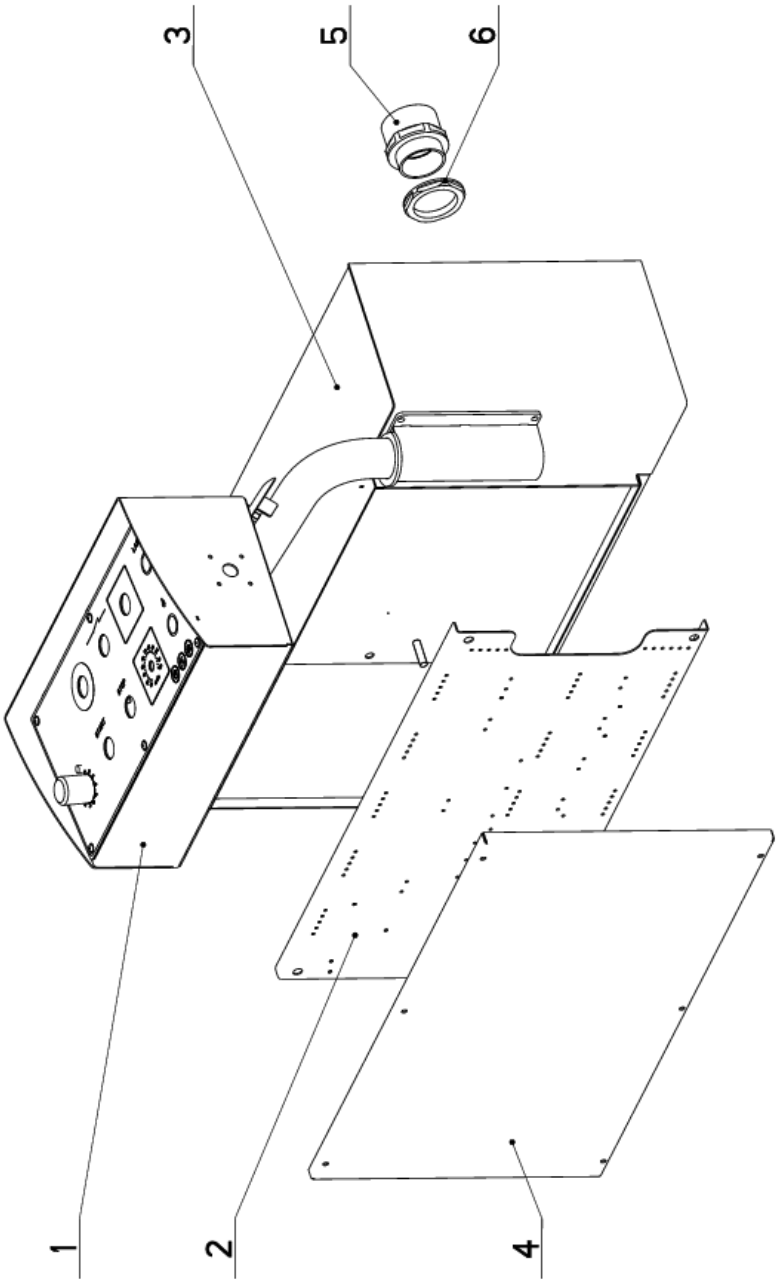

Cislo Sestavy/Number of assembly/Nummer der Baugruppe; Verze (Ver.)/Version/Version; Nazev sestavy/Assembly title/Name der Baugruppe; Pozice (Poz.)/Position/Position;
Objednaci cislo/Purchase order number/Bestellnummer; Nazev polozky/Volume title/Name der Position; Rozmer/Stock size/Abmessung

7.16. Ovládací panel / Control panel / Bedienpult

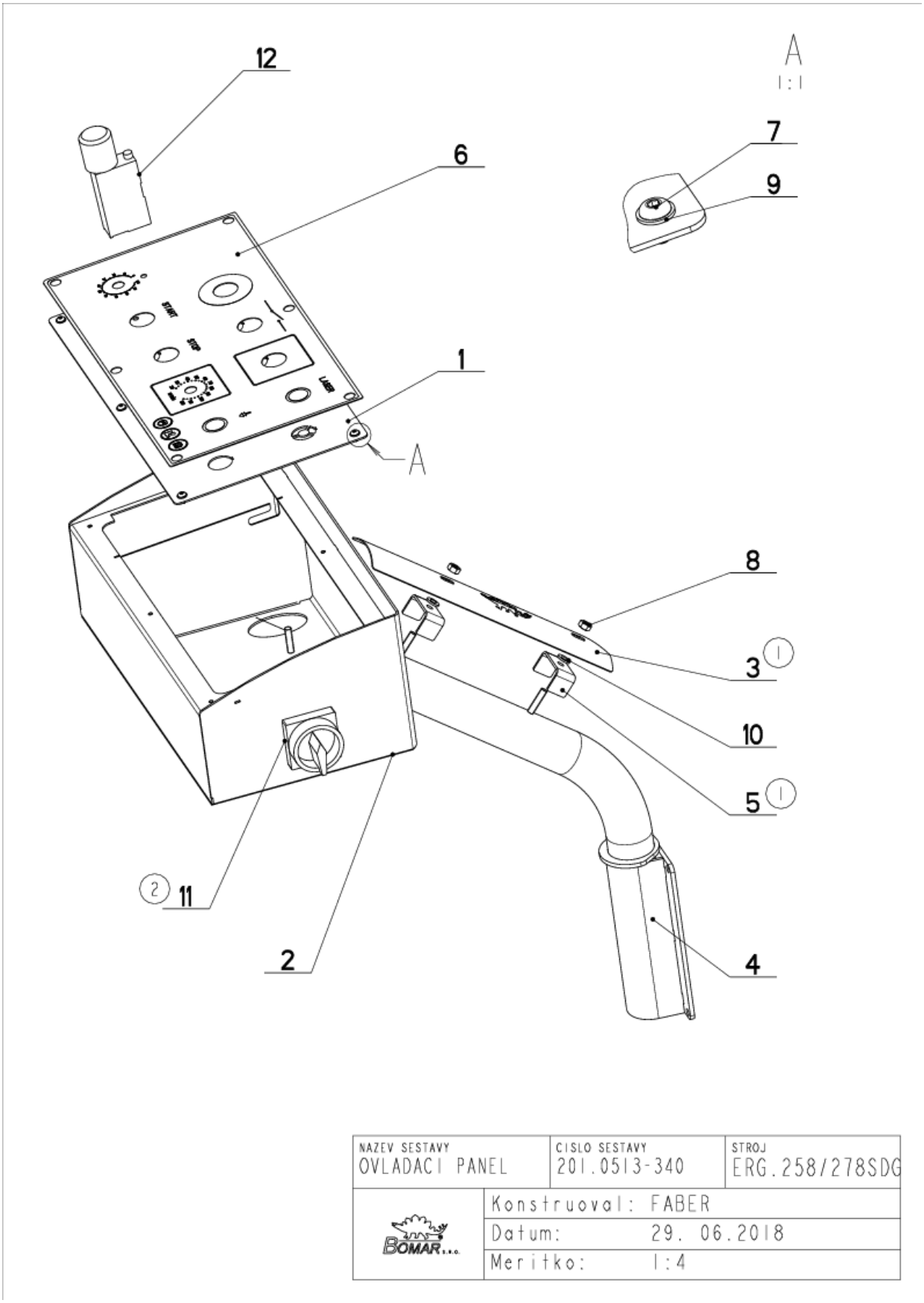

7.17. Kusovník / Piece list / Stückliste
Ovládací panel / Control panel / Bedienpult

Cislo Sestavy	Ver.	Nazev sestavy
201.0513-340	2	OVLADACI PANEL/CONTROL PANEL/BEDIENPULT

Poz.	Objednaci cislo	Ver.	Nazev polozky	Rozmer	Ks
1	30.0513-241	0	OVLADACI PANEL / CONTROL PANEL / BEDIENPULT		1
2	30.0513-320	0	NOHA / LEG / STANDER		1
3	30.0513-344 (1)	0	KRYT / COVER / ABDECKUNG	P 1x64	1
4	30.2814-607	2	DRZAK / HOLDER / HALTER		1
5	30.ER2530-308 (1)	0	DRZAK / HOLDER / HALTER	P 2x20	2
6	31.0513-404	0	SAMOLEPKA / STICKER / AUFKLEBER		1
7	90.013.27.001	0	SROUB / BOLT / SCHRAUBE	M4x8	6
8	90.100.55.004	0	MATICE / NUT / MUTTER	MATICE _ M6	2
9	90.150.50.002	0	PODLOZKA / WASHER / UNTERLEGSCHEIBE	PODLOZKA 4,3	6
10	90.150.50.004	0	PODLOZKA / WASHER / UNTERLEGSCHEIBE	PODLOZKA 6,4	2
11	91.170.028 (2)	0	VYPINAC / SWITCH / SCHALTER	VYPINAC	1
12	92.152.001	0	VENTIL SKRTICI / CHOKE VALVE / DROSSELVENTIL	VS01-04/R 2.5-0	1

1.ZRUS.DRZAK 30.9307-109 A NAHR.30.ER2530-308,PRID.KRYT 30.0513-344. 155/ZM365 10.11.2016 SLEZACKOVA

2.PRID. 1xVYPINAC 91.170.028; 115/ZM213 29.6.2018 SCERBA

Cislo Sestavy/Number of assembly/Nummer der Baugruppe; Verze (Ver.)/Version/Version; Nazev sestavy/Assembly title/Name der Baugruppe; Pozice (Poz.)/Position/Position; Objednaci cislo/Purchase order number/Bestellnummer; Nazev polozky/Volume title/Name der Position; Rozmer/Stock size/Abmessung

7.18. Rameno / Saw arm / Sägerahmen

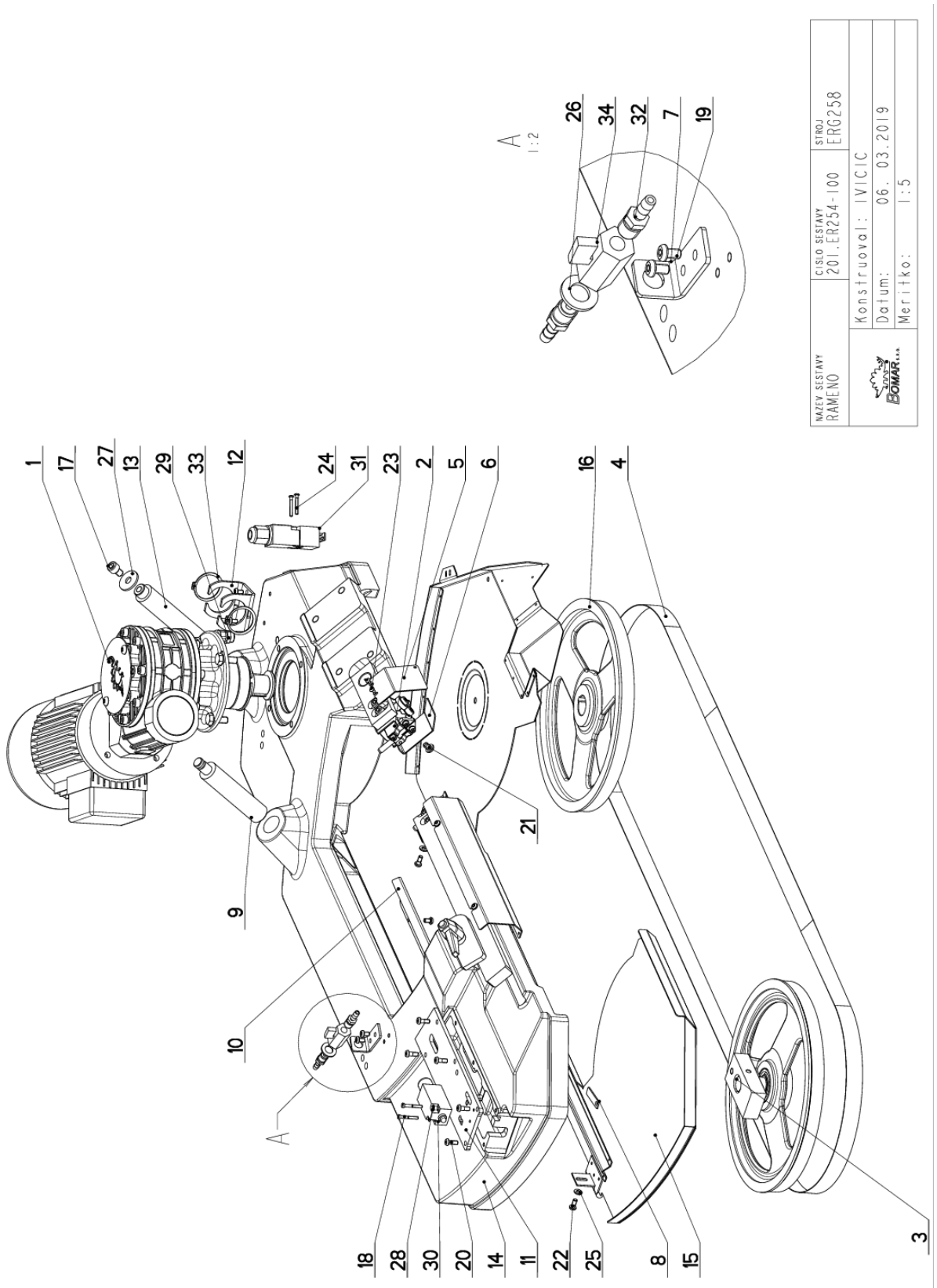

7.19. Kusovník / Piece list / Stückliste - Rameno / Saw arm / Sägerahmen

Cislo Sestavy	Ver.	Nazev sestavy
201.ER254-100	0	RAMENO/SAW ARM/SÄGERAHMEN

Poz.	Objednaci cislo	Ver.	Nazev polozky	Rozmer	Ks
1	201.ER255-100	0	POHON / DRIVE / ANTRIEB		1
2	201.ER256-000	2	VEDENI PASU / BELT GUIDE / SÄGEBANDFÜHRUNG		1
3	201.ER258-000	0	NAPINANI / TENSIONING / SPANNUNG		1
4	30.0504-961	0	PAS PILOVY / SAW BELT / SÄGEBAND	2910x25(7)x0.9	1
5	30.0704-038	0	KRYT PASU / BELT COVER / BANDABDECKUNG	P 1.5x60	1
6	30.0704-043	0	KRYT PASU / BELT COVER / BANDABDECKUNG	P 1.5x46	1
7	30.1814-011	2	DRZAK / HOLDER / HALTER	P 3x76	1
8	30.ER254-002	0	PLECH / PLATE / BLECH	P 2x12	1
9	30.ER254-003	1	CEP / LUG / BOLZEN	d 30	1
10	30.ER254-004	1	KRYT RAMENE / SHOULDER COVER / RAHMENABDECKUNG	P 1,5x61	1
11	30.ER254-007	1	KRYT NAPINANI / TENSIONING COVER / BANDSPANNUNGSABDECKUNG	P 6x80	1
12	30.ER254-008	2	DRZAK / HOLDER / HALTER	P 4x60	1
13	30.ER254-009	1	TYC / POLE / STANGE	d 30	1
14	30.ER254-101	0	RAMENO / SAW ARM / SÄGERAHMEN		1
15	30.ER254-305	1	KRYT RAMENE / SHOULDER COVER / RAHMENABDECKUNG		1
16	30.ER265-601	0	KOLO HNACI / DRIVE WHEEL / ANTRIEBSRAD		1
17	90.001.25.044	0	SROUB IMBUS / ALLEN HEAD BOLT / IMBUSSCHRAUBE	M10X14	1
18	90.012.50.007	0	SROUB / ROLLER BOLT / ZYLINDERSCHRAUBE	SROUB M4X30	2
19	90.013.27.007	0	SROUB PULKULATY / HALF ROUND BOLT / HALBRUNDSCHRAUBE	M6X10	6
20	90.013.27.008	0	SROUB PULKULATY / HALF ROUND BOLT / HALBRUNDSCHRAUBE	M6X16	6
21	90.013.27.011	0	SROUB PULKULATY / HALF ROUND BOLT / HALBRUNDSCHRAUBE	M8X12	1
22	90.013.27.012	0	SROUB PULKULATY / HALF ROUND BOLT / HALBRUNDSCHRAUBE	M6X14	2
23	90.013.27.017	0	SROUB PULKULATY / HALF ROUND BOLT / HALBRUNDSCHRAUBE	M4x6	2
24	90.013.9Z.104	0	SROUB PULKULATY / HALF ROUND BOLT / HALBRUNDSCHRAUBE	M4x30	2
25	90.150.50.004	0	PODLOZKA / WASHER / UNTERLEGSCHEIBE	PODLOZKA 6,4	2
26	90.150.50.007	0	PODLOZKA / WASHER / UNTERLEGSCHEIBE	PODLOZKA 13	1
27	90.151.50.001	0	PODLOZKA / WASHER / UNTERLEGSCHEIBE	PODLOZKA 10	1
28	90.152.50.005	0	PODLOZKA VEJIROVA / /	PODLOZKA 4,3	2
29	91.070.011	0	VYVODKA / BUSHING / TÜLLE	M16x1.5	1
30	91.173.007	0	SPINAC KONCOVY / END SWITCH / ENDSCHALTER	-R1WK	1
31	91.173.012	0	SPINAC KONCOVY / END SWITCH / ENDSCHALTER		1
32	94.202.002	0	REDUKCE / REDUCTION / ADAPTOR / REDUKTION	GES 6/R1/4"	2
33	95.800.016	0	SEGR KRIDEL. / OUTSIDE SAFETY RING / SICHERUNGSRING AUSSEN	POJISTNY KROUZEK 42	2
34	99.260.003	0	VENTIL / VALVE / VENTIL	1/4"	1

Cislo Sestavy/Number of assembly/Nummer der Baugruppe; Verze (Ver.)/Version/Version; Nazev sestavy/Assembly title/Name der Baugruppe; Pozice (Poz.)/Position/Position; Objednaci cislo/Purchase order number/Bestellnummer; Nazev polozky/Volume title/Name der Position; Rozmer/Stock size/Abmessung

7.20. Pohon / Drive / Antrieb

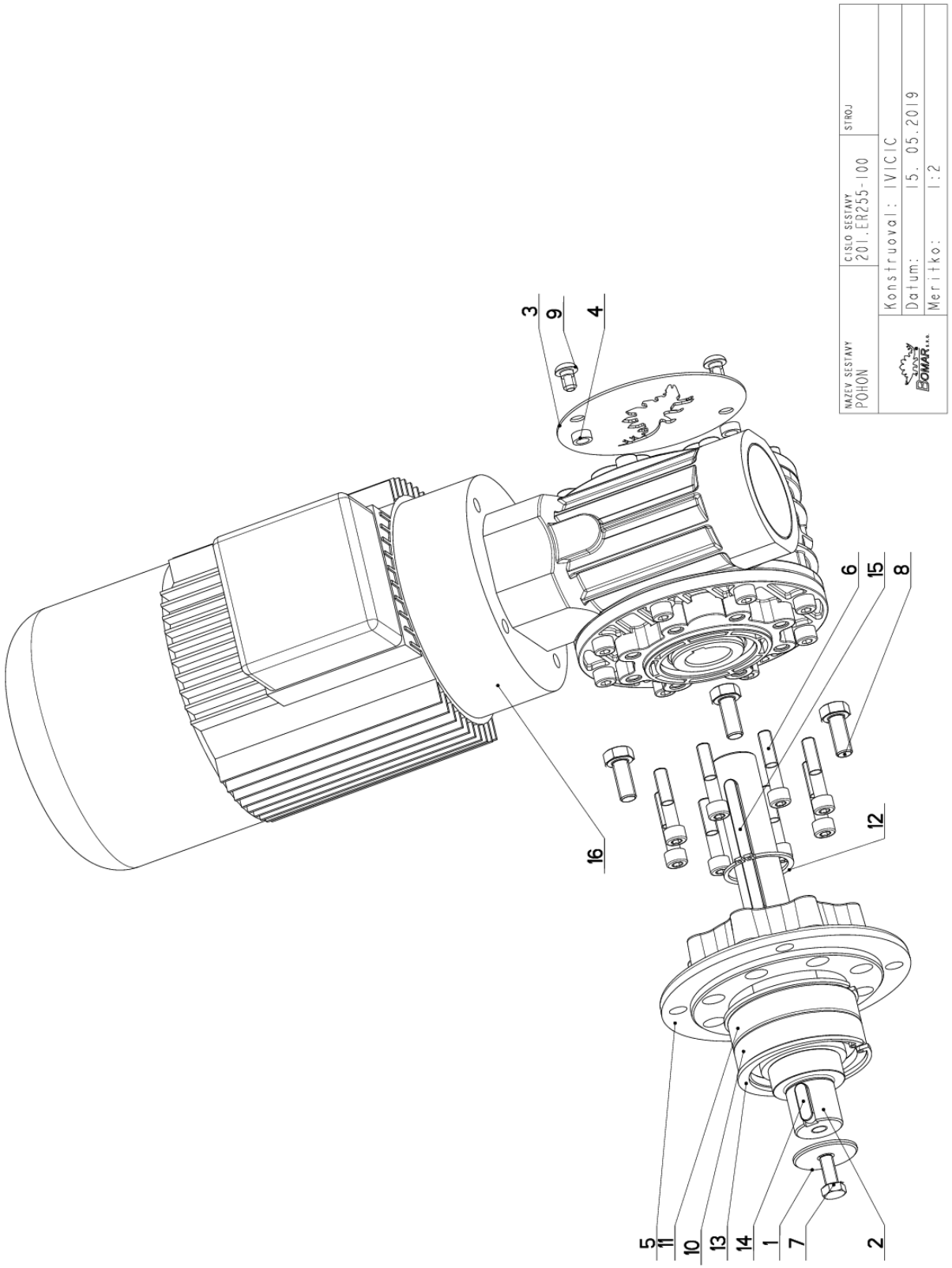

7.21. Kusovník / Piece list / Stückliste
Pohon / Drive / Antrieb

Cislo Sestavy	Ver.	Nazev sestavy
201.ER255-100	0	POHON/DRIVE /ANTRIEB

Poz.	Objednaci cislo	Ver.	Nazev polozky	Rozmer	Ks
1	30.0505-011	1	PODLOZKA / WASHER / UNTERLEGSCHEIBE	TYC 40	1
2	30.ER255-101	0	HRIDEL / SHAFT / WELLE	D 45	1
3	30.ER255-105	0	KRYT / COVER / ABDECKUNG	P1,5x118	1
4	30.ER255-107	0	DISTANC / DISTANCE / DISTANZ	TR 12x2	2
5	30.ER255-202	0	PRIRUBA / FLANGE / FLANSCHE	ODLITEK	1
6	90.001.25.036	0	SROUB IMBUS / ALLEN HEAD BOLT / IMBUSSCHRAUBE	M8X40	8
7	90.005.55.015	0	SROUB 6HRANNY / 6 SIDED BOLT / SECHSKANTSCHRAUBE	SROUB M8X20	1
8	90.005.55.024	0	SROUB 6HRANNY / 6 SIDED BOLT / SECHSKANTSCHRAUBE	SROUB M10X25	4
9	90.013.27.011	0	SROUB PULKULATY / HALF ROUND BOLT / HALBRUNDSCHRAUBE	M8X12	2
10	95.001.021	0	LOZISKO / BEARING / LAGER	6208 2RS	1
11	95.200.001	0	LOZISKO / BEARING / LAGER	VALECKOVA L. IRADA	1
12	95.800.015	0	SEGR HRIDEL. / OUTSIDE SAFETY RING / SICHERUNGSRING AUSSEN	POJISTNY KROUZEK 40	1
13	95.801.013	0	SEGR DIRA / INSIDE SAFETY RING / SICHERUNGSRING INNEN	POJISTNY KROUZEK 80	2
14	95.810.007	0	PERO TESNE / TIGHT SPRING / PASSFEDER	PERO 8X7X25	1
15	95.810.028	0	PERO TESNE / TIGHT SPRING / PASSFEDER	PERO 8X7X90	1
16	99.001.260	0	POHON / DRIVE / ANTRIEB	M170-PAM90-20/1-FP-i20-B14	1

Cislo Sestavy/Number of assembly/Nummer der Baugruppe; Verze (Ver.)/Version/Version; Nazev sestavy/Assembly title/Name der Baugruppe; Pozice (Poz.)/Position/Position; Objednaci cislo/Purchase order number/Bestellnummer; Nazev polozky/Volume title/Name der Position; Rozmer/Stock size/Abmessung

7.22. Vedení pásu / Belt guide / Sägebandführung

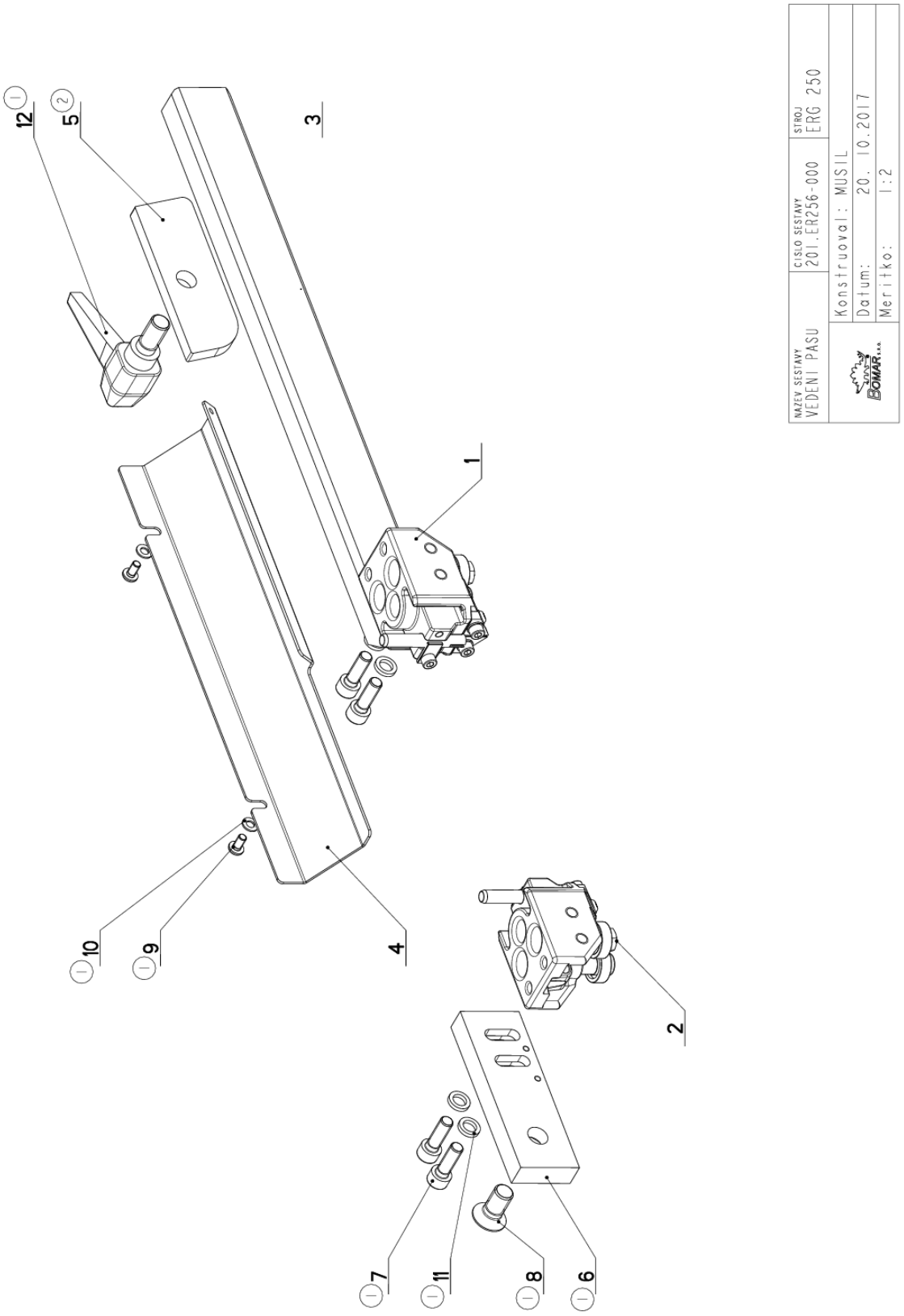

7.23. Kusovník / Piece list / Stückliste - Vedení pásu / Belt guide / Sägebandführung

Cislo Sestavy	Ver.	Nazev sestavy
201.ER256-000	2	VEDENI PASU/BELT GUIDE/SÄGEBANDFÜHRUNG

Poz.	Objednaci cislo	Ver.	Nazev polozky	Rozmer	Ks
1	201.0510-500	1	KOSTKA VODICI / LEAD CUBE / FÜHRUNGSKLOTZ	SESTAVA	1
2	201.0510-600	1	KOSTKA VODICI / LEAD CUBE / FÜHRUNGSKLOTZ	SESTAVA	1
3	30.0104-015	7	LISTA / TRIM / LEISTE	HR 40x20	1
4	30.ER256-005	1	KRYT PASU / BELT COVER / BANDABDECKUNG	P 1,5x94	1
5	30.ER256-101 (2)	0	UPINKA / FASTENER / SPANNEISEN	P 8x40	1
6	30.FL256-002 (1)	1	LISTA / TRIM / LEISTE	HR 40x15	1
7	90.001.25.033 (1)	0	SROUB IMBUS / ALLEN HEAD BOLT / IMBUSSCHRAUBE	8x25	4
8	90.011.27.025 (1)	0	ZAPUSTNY IMBUS / COUNTERSINK BOLT / SENKSCHRAUBE	SROUB M12X25	1
9	90.013.27.003 (1)	0	SROUB / BOLT / SCHRAUBE	M5X10	2
10	90.150.50.003 (1)	0	PODLOZKA / WASHER / UNTERLEGSCHEIBE	PODLOZKA 5,3	2
11	90.163.00.001 (1)	0	PODLOZKA / WASHER / UNTERLEGSCHEIBE	NORD-LOCK	4
12	94.008.008 (1)	0	PAKA UPINACI / ATTACHMENT LEVER / SPANNHEBEL	M12x25	1

1.ZRUS.LISTA 30.ER236-002 A NAHR.30.FL256-002,UPINKA 30.ER256-003 A NAHR.30.ER256-001,ZRUS.PAKA UTAHOVACI M10x25 (94.008.005) A NAHR.PAKA UTAHOVACI M12x25(94.008.008),PRID,2xPODLOZKA 5,3(90.150.50.003),2xSROUB M5x10(90.013.27.003), 4xPODLOZKA NORD-LOCK(90.163.00.002),4xSROUB M8x25(90.001.25.033),1xSROUB M12x25(90.011.27.025). 021/ZM147 11.4.2017 SLEZACKOVA

2.ZRUS.UPINKA 30.ER256-001 A NAHR.30.ER256-101; 148/ZM257 18.7.2018 SCERBA

Cislo Sestavy/Number of assembly/Nummer der Baugruppe; Verze (Ver.)/Version/Version; Nazev sestavy/Assembly title/Name der Baugruppe; Pozice (Poz.)/Position/Position; Objednaci cislo/Purchase order number/Bestellnummer; Nazev polozky/Volume title/Name der Position; Rozmer/Stock size/Abmessung

7.24. Kostka vodící / Lead cube / Führungsklotz

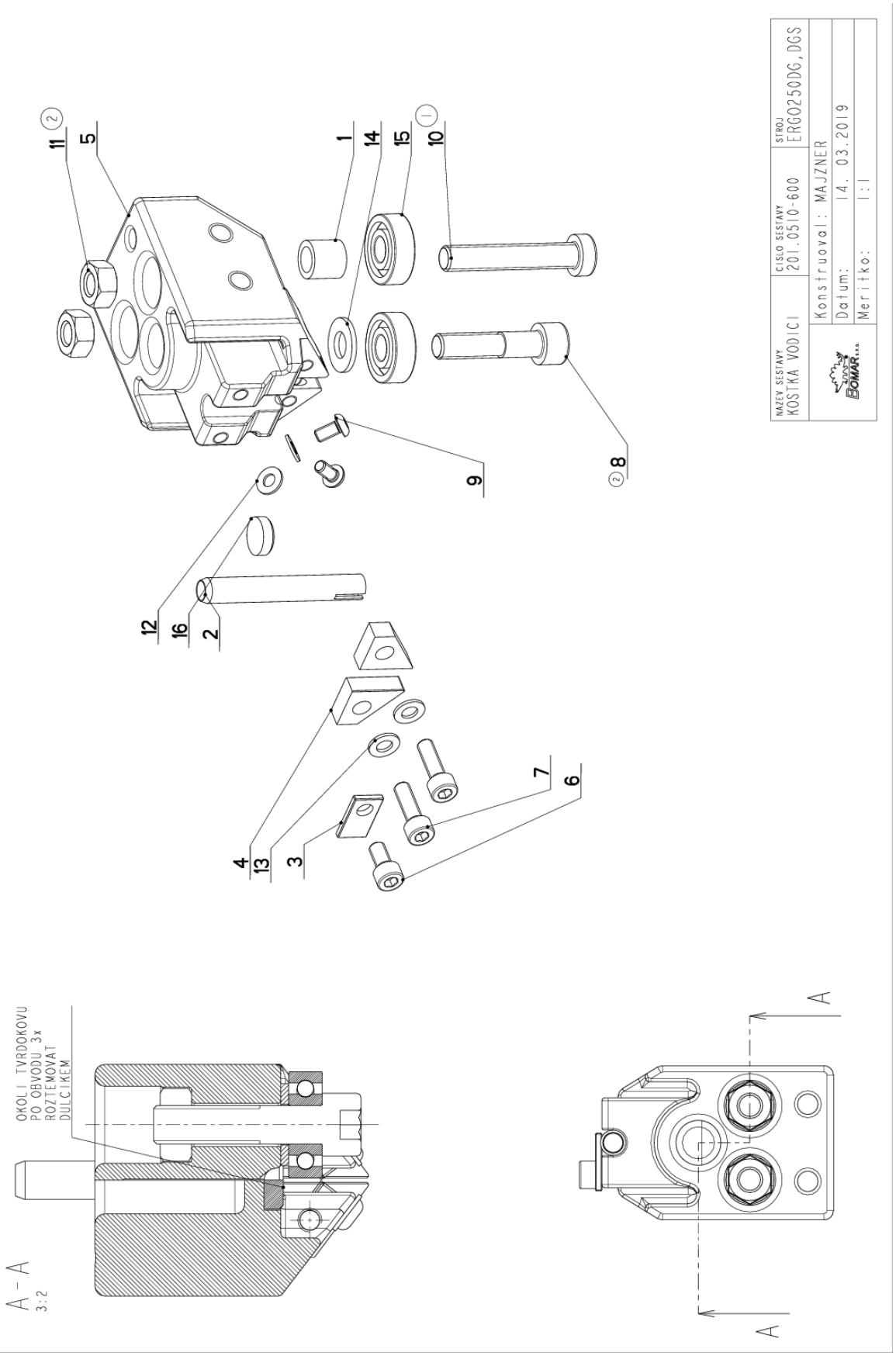

7.25. Kusovník / Piece list / Stückliste - Kostka vodící / Lead cube / Führungsklotz

Cislo Sestavy	Ver.	Nazev sestavy
201.0510-600	2	KOSTKA VODICI/LEAD CUBE/FÜHRUNGSKLOTZ

Poz.	Objednaci cislo	Ver.	Nazev polozky	Rozmer	Ks
1	30.LK10-006	1	TRUBKA / TUBE / ROHR	TR 12x2	1
2	30.LK10-008	2	TRUBKA / TUBE / ROHR	TR 8x1	1
3	30.LK10-109	0	PRILOZKA / STRAP / LASCHE	P 2-10	1
4	31.LK10-007	0	TVRDOKOV / HARD METAL / HM-SEGMENT	HR 18.1x15.5	2
5	85.LK10-201	0	KOSTKA VODICI / LEAD CUBE / FÜHRUNGSKLOTZ	ODLITEK	1
6	90.001.25.007	0	SROUB IMBUS / ALLEN HEAD BOLT / IMBUSSCHRAUBE	M5X10	1
7	90.001.25.009	0	SROUB IMBUS / ALLEN HEAD BOLT / IMBUSSCHRAUBE	M5X16	2
8	90.001.55.035 (2)	0	SROUB IMBUS / ALLEN HEAD BOLT / IMBUSSCHRAUBE	M8X35	1
9	90.013.27.001	0	SROUB / BOLT / SCHRAUBE	M4x8	2
10	90.015.25.033 (1)	0	SROUB IMBUS / ALLEN HEAD BOLT / IMBUSSCHRAUBE	M8x45	1
11	90.100.55.005 (2)	0	MATICE / NUT / MUTTER	MATICE _ M8	2
12	90.150.50.002	0	PODLOZKA / WASHER / UNTERLEGSCHEIBE	PODLOZKA 4,3	2
13	90.150.50.003	0	PODLOZKA / WASHER / UNTERLEGSCHEIBE	PODLOZKA 5,3	2
14	90.150.50.005	0	PODLOZKA / WASHER / UNTERLEGSCHEIBE	PODLOZKA 8,4	1
15	95.001.001	0	LOZISKO / BEARING / LAGER	608 2RS	2
16	99.040.002	0	TVRDOKOV / HARD METAL / HM-SEGMENT	d 12	1

1.ZRUS.SROUB M8x45 6HRANNY(90.005.55.020) A NAHR.M8x45 DIN7984(90.015.25.033). 286/ZM342 5.12.2012

2.ZRUS 90.005.55.018 A NAHR.90.001.25.035; ZRUS 90.101.55.001 A NAHR.90.100.55.005; 260/ZM432 29.11.2018 SCERBA

Cislo Sestavy/Number of assembly/Nummer der Baugruppe; Verze (Ver.)/Version/Version; Nazev sestavy/Assembly title/Name der Baugruppe; Pozice (Poz.)/Position/Position; Objednaci cislo/Purchase order number/Bestellnummer; Nazev polozky/Volume title/Name der Position; Rozmer/Stock size/Abmessung

7.26. Kostka vodící / Lead cube / Führungsklotz

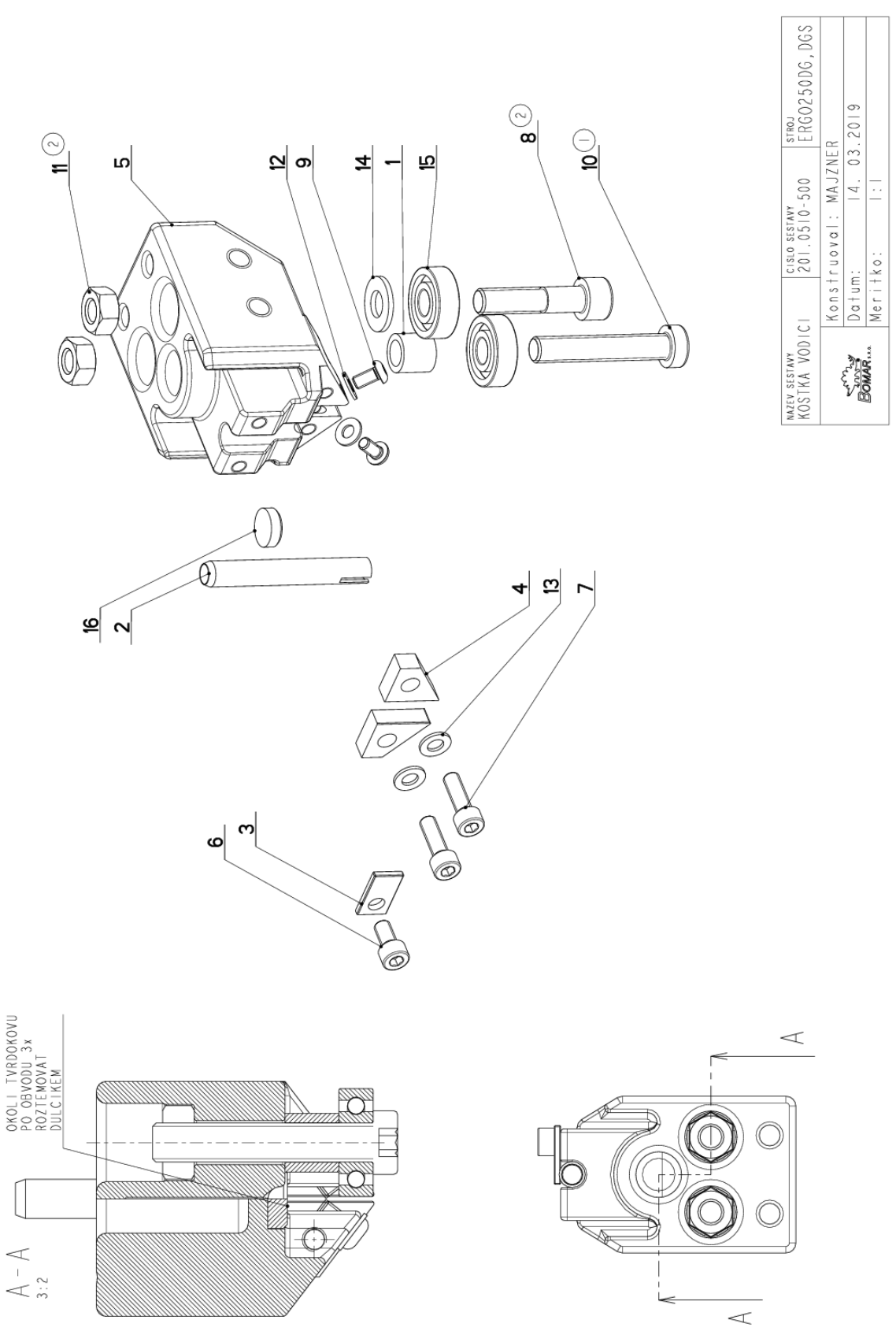

7.27. Kusovník / Piece list / Stückliste - Kostka vodící / Lead cube / Führungsklotz

Cislo Sestavy	Ver.	Nazev sestavy
201.0510-500	2	KOSTKA VODICI/LEAD CUBE/FÜHRUNGSKLOTZ

Poz.	Objednaci cislo	Ver.	Nazev polozky	Rozmer	Ks
1	30.LK10-006	1	TRUBKA / TUBE / ROHR	TR 12x2	1
2	30.LK10-008	2	TRUBKA / TUBE / ROHR	TR 8x1	1
3	30.LK10-109	0	PRILOZKA / STRAP / LASCHE	P 2-10	1
4	31.LK10-007	0	TVRDOKOV / HARD METAL / HM-SEGMENT	HR 18.1x15.5	2
5	85.LK10-201	0	KOSTKA VODICI / LEAD CUBE / FÜHRUNGSKLOTZ	ODLITEK	1
6	90.001.25.007	0	SROUB IMBUS / ALLEN HEAD BOLT / IMBUSSCHRAUBE	M5X10	1
7	90.001.25.009	0	SROUB IMBUS / ALLEN HEAD BOLT / IMBUSSCHRAUBE	M5X16	2
8	90.001.55.035 (2)	0	SROUB IMBUS / ALLEN HEAD BOLT / IMBUSSCHRAUBE	M8X35	1
9	90.013.27.001	0	SROUB / BOLT / SCHRAUBE	M4x8	2
10	90.015.25.033 (1)	0	SROUB IMBUS / ALLEN HEAD BOLT / IMBUSSCHRAUBE	M8x45	1
11	90.100.55.005 (2)	0	MATICE / NUT / MUTTER	MATICE _ M8	2
12	90.150.50.002	0	PODLOZKA / WASHER / UNTERLEGSCHEIBE	PODLOZKA 4,3	2
13	90.150.50.003	0	PODLOZKA / WASHER / UNTERLEGSCHEIBE	PODLOZKA 5,3	2
14	90.150.50.005	0	PODLOZKA / WASHER / UNTERLEGSCHEIBE	PODLOZKA 8,4	1
15	95.001.001	0	LOZISKO / BEARING / LAGER	608 2RS	2
16	99.040.002	0	TVRDOKOV / HARD METAL / HM-SEGMENT	d 12	1

1.ZRUS.SROUB M8x45 6HRANNY(90.005.55.020) A NAHR.M8x45 DIN7984(90.015.25.033). 286/ZM342 5.12.2012

2.ZRUS 90.005.55.018 A NAHR.90.001.25.035; ZRUS 90.101.55.001 A NAHR.90.100.55.005; 260/ZM432 29.11.2018 SCERBA

Cislo Sestavy/Number of assembly/Nummer der Baugruppe; Verze (Ver.)/Version/Version; Nazev sestavy/Assembly title/Name der Baugruppe; Pozice (Poz.)/Position/Position; Objednaci cislo/Purchase order number/Bestellnummer; Nazev polozky/Volume title/Name der Position; Rozmer/Stock size/Abmessung

7.28. Napínání / Tensioning / Spannung

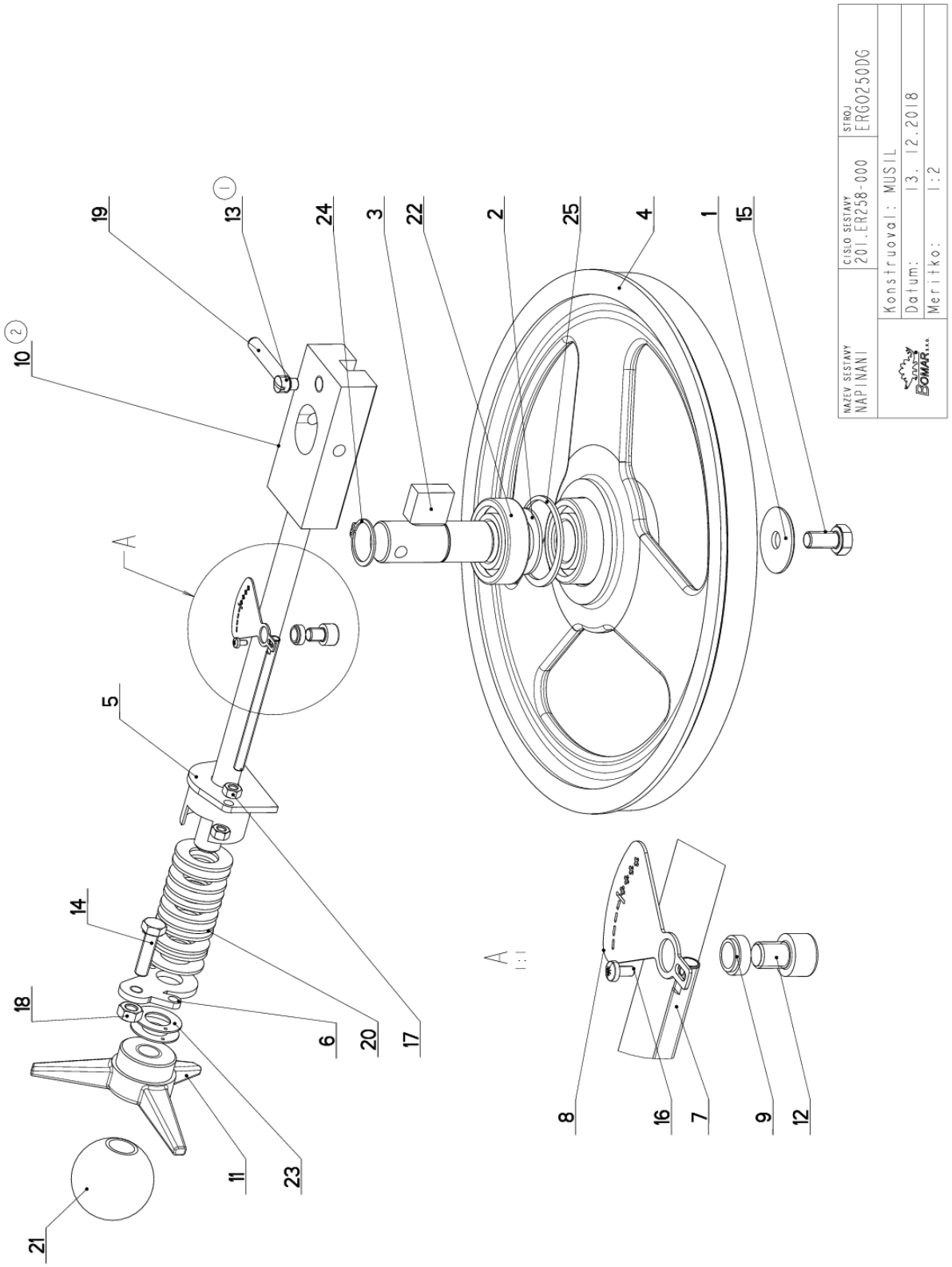

7.29. Kusovník / Piece list / Stückliste - Napínání / Tensioning / Spannung

Cislo Sestavy	Ver.	Nazev sestavy
201.ER258-000	2	NAPINANI/TENSIONING/SPANNUNG

Poz.	Objednaci cislo	Ver.	Nazev polozky	Rozmer	Ks
1	30.0505-011	0	PODLOZKA / WASHER / UNTERLEGSCHEIBE	TYC 40	1
2	30.0702-023	0	KROUZEK DISTANCNI / DISTANCE RING / DISTANZRING	P 2x40	1
3	30.0708-102	1	CEP NAPINANI / TENSIONING LUG / SPANNUNGSBOLZEN		1
4	30.ER258-001	0	KOLO NAPINACI / TENSIONING WHEEL / UMLENKRAD		1
5	30.ER258-004	0	DRZAK / HOLDER / HALTER		1
6	30.ER258-005	0	PRILOZKA / STRAP / LASCHE	P 4x42	1
7	30.ER258-006	0	TAHLO / GUY ROD / ZUGSTANGE	M6	1
8	30.ER258-007	0	STUPNICE / SCALE / SKALA	P 1x41	1
9	30.ER258-008	0	TRUBKA / TUBE / ROHR	TR 12x2	1
10	30.ER278-011 (2)	1	VEDENI / GUIDE / BACKENFÜHRUNG		1
11	31.0104-006	0	HVEZDICE / STAR WHEEL / STERN	PLAST	1
12	90.001.25.028	0	SROUB IMBUS / ALLEN HEAD BOLT / IMBUSSCHRAUBE	M8X10	1
13	90.004.2D.026 (1)	0	SROUB STAVECI / ADJUSTMENT BOLT / STELLSCHRAUBE	SROUB M10X14	1
14	90.005.55.017	0	SROUB 6HRANNY / 6 SIDED BOLT / SECHSKANTSCHRAUBE	SROUB M8X30	1
15	90.005.55.023	0	SROUB 6HRANNY / 6 SIDED BOLT / SECHSKANTSCHRAUBE	SROUB M10X20	1
16	90.014.50.008		SROUB / BOLT / SCHRAUBE	SROUB M3x6	1
17	90.100.55.004	0	MATICE / NUT / MUTTER	M6	2
18	90.100.55.005	0	MATICE / NUT / MUTTER	MATICE _ M8	1
19	90.300.0Z.012	0	KOLIK VALC. KAL. / CYLINDRICAL PIN TEMPERED / ZYLINDERSTIFT GEHARTET	KOLIK 8X50	1
20	90.350.0Z.002	0	PRUZINA TALIROVA / DISC SPRING / TELLERFEDER	35,5X18,3X2,0X2,8	11
21	94.001.005	0	RUKOJET / HANDLE / GRIFF	M16	1
22	95.001.018	0	LOZISKO / BEARING / LAGER	6205 2RS	2
23	95.750.001	0	KROUZEK KU / KU RING / KU-RING	16x1	2
24	95.800.012	0	SEGR HRIDEL. / OUTSIDE SAFETY RING / SICHERUNGSRING AUSSEN	POJISTNY KROUZEK 25	1
25	95.801.009	0	SEGR DIRA / INSIDE SAFETY RING / SICHERUNGSRING INNEN	POJISTNY KROUZEK 52	1

1.ZRUS.SROUB M8x10 90.004.2D.007 A NAHR. M10x14 90.004.2D.026. 169/ZM237 13.7.2017 CERNY

2.ZRUS.30.ER258-011 A NAHR.30.ER278-011 177/ZM295 23.8.2018 SCERBA

Cislo Sestavy/Number of assembly/Nummer der Baugruppe; Verze (Ver.)/Version/Version; Nazev sestavy/Assembly title/Name der Baugruppe; Pozice (Poz.)/Position/Position; Objednaci cislo/Purchase order number/Bestellnummer; Nazev polozky/Volume title/Name der Position; Rozmer/Stock size/Abmessung

7.30. Válec zvedací / Lifting cylinder / Hebezylinder

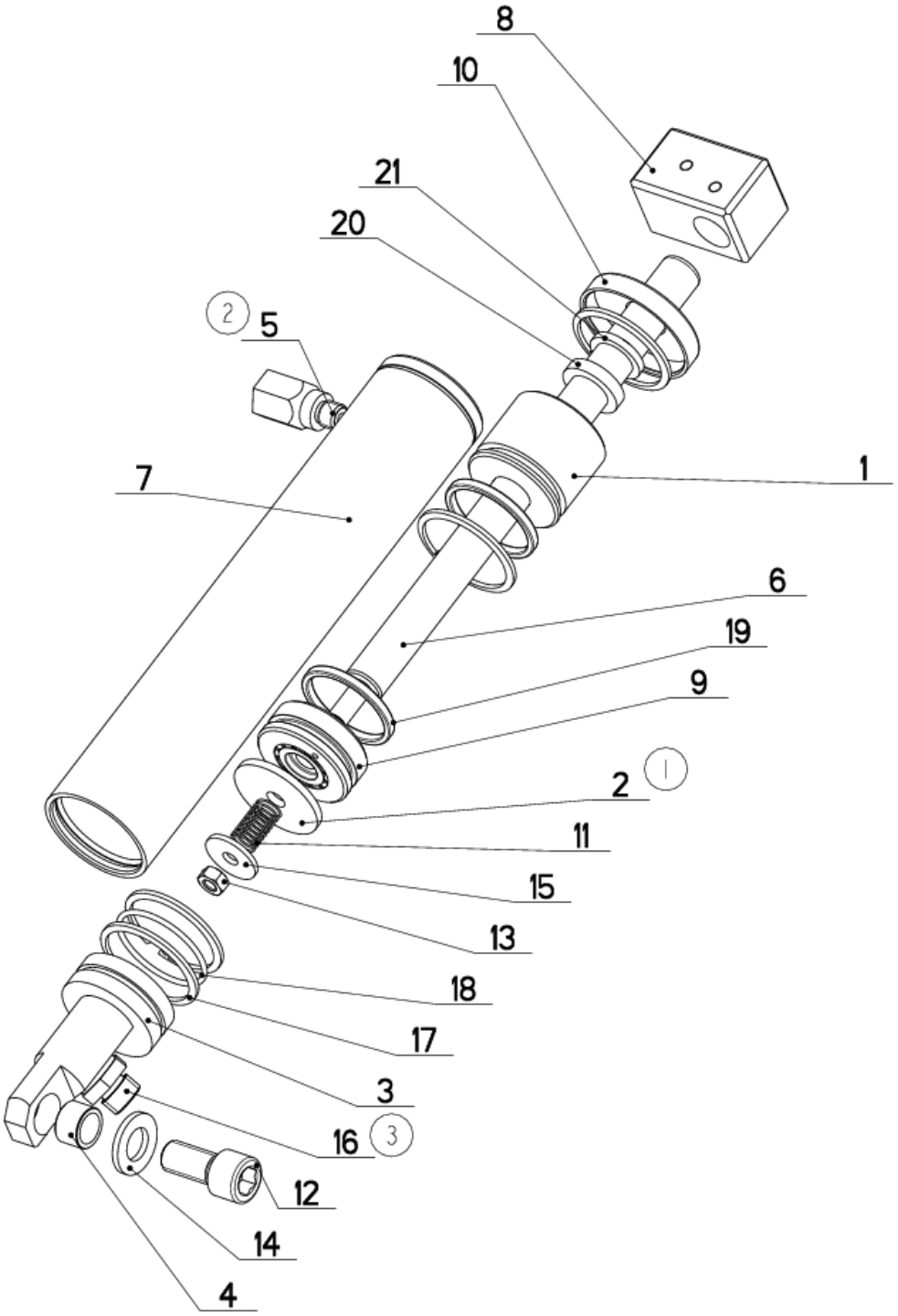

NAZEV SESTAVY	CISLO SESTAVY	STROJ
VALEC ZVEDACI	201.ER257-010	ERG.258/278DG
	Konstruoval: MUSIL	
	Datum: 17. 05.2019	
	Meritko: 1:2	

7.31. Kusovník / Piece list / Stückliste - Válec zvedací / Lifting cylinder / Hebezylinder

Cislo Sestavy	Ver.	Nazev sestavy
201.ER257-010	3	VALEC ZVEDACI/LIFTING CYLINDER/HEBEZYLINDER

Poz.	Objednaci cislo	Ver.	Nazev polozky	Rozmer	Ks
1	30.0507-003	0	VIKO / COVER / DECKEL	d 45	1
2	30.0507-007 (1)	0	KLAPKA / PULLEY / VENTILKLAPPE	P 3x37	1
3	30.0507-904	1	VIKO / COVER / DECKEL	d 42	1
4	30.0507-913	3	POUZDRO / SLEEVE / BÜCHSE	d 16	1
5	30.3407-103 (2)	1	REDUKCE / REDUCTION / ADAPTOR / REDUKTION	TYC 17	1
6	30.ER257-011	0	PISTNICE / PISTON ROD / KOLBENSTANGE	d 16f8	1
7	30.ER257-012	0	VALEC / ROLLER / ZYLINDER	TR 45/40	1
8	30.LC07-002	1	DRZAK / HOLDER / HALTER	HR 30x30	1
9	30.LC07-106	1	PIST / PISTON / KOLBEN	ODLITEK	1
10	31.0507-010	0	VIKO / COVER / DECKEL		1
11	31.0707-014	0	PRUZINA / SPRING / FEDER	0.63x10x20x9.5	1
12	90.001.25.057	0	SROUB IMBUS / ALLEN HEAD BOLT / IMBUSSCHRAUBE	M12x25	1
13	90.100.55.004	0	MATICE / NUT / MUTTER	MATICE _ M6	1
14	90.150.50.007	0	PODLOZKA / WASHER / UNTERLEGSCHEIBE	PODLOZKA 13	1
15	90.151.50.004	0	PODLOZKA / WASHER / UNTERLEGSCHEIBE	PODLOZKA 6	1
16	92.002.003 (3)	0	SROUBENI PRIME / DIRECT BOLTING / GERADE VERSCHRAUBUNG		1
17	95.801.005	0	SEGR DIRA / INSIDE SAFETY RING / SICHERUNGSRING INNEN	POJISTNY KROUZEK 40	4
18	96.001.010	0	KROUZEK O STATICKY / STATIC O RING / O-RING STATISCH	d36x2	1
19	96.002.017	0	KROUZEK O DYNAMICKY / DYNAMIC O RING / O-RING DYNAMISCH	34x3 NBR 70SH	2
20	96.041.001	0	TESNENI / SEALING / DICHTUNG	d16	1
21	96.060.001	0	KROUZEK STIRACI / SCRAPER RING / ABSTREIFRING	16x22 NBR 70	1

1.ZRUSENA KLAPKA 30.0507-004 A NAHR.30.0507-007. 059/ZM073 2.3.2017 SLEZACKOVA
2.PRIDANA REDUKCE 30.3407-103. 124/ZM181 19.5.2017 KUDELA
3.ZRUSENO SROUBENI 92.002.001 A NAHRAZENO 92.002.002. 251/ZM375 27.11.2017 SCERBA

Cislo Sestavy/Number of assembly/Nummer der Baugruppe; Verze (Ver.)/Version/Version; Nazev sestavy/Assembly title/Name der Baugruppe; Pozice (Poz.)/Position/Position; Objednaci cislo/Purchase order number/Bestellnummer; Nazev polozky/Volume title/Name der Position; Rozmer/Stock size/Abmessung

7.32. Stůl / Table / Tisch

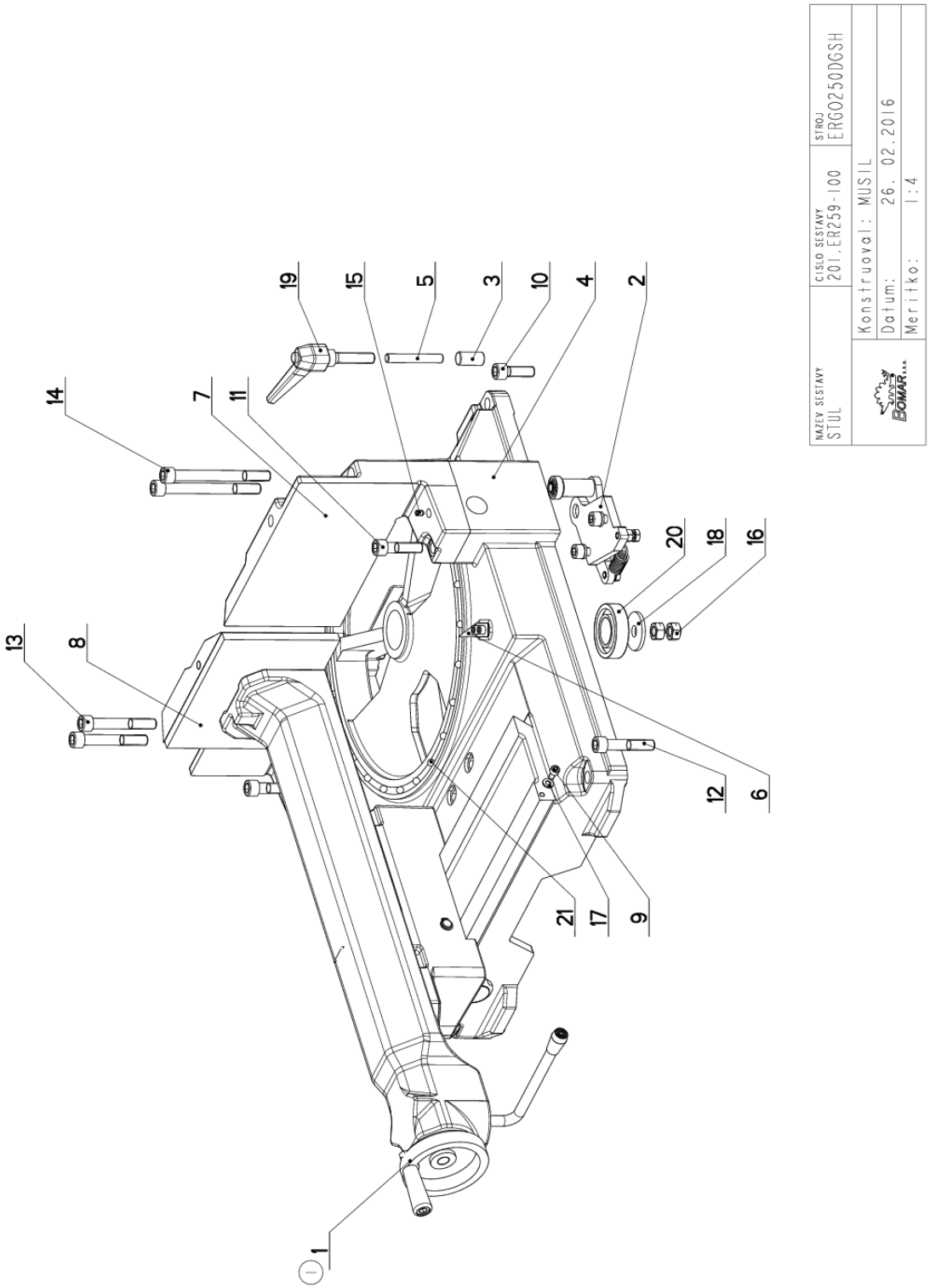

7.33. Kusovník / Piece list / Stückliste - Stůl / Table / Tisch

Cislo Sestavy	Ver.	Nazev sestavy
201.ER259-100	1	STUL/TABLE/TISCH

Poz.	Objednaci cislo	Ver.	Nazev polozky	Rozmer	Ks
1	201.ER253-210 (1)	3	SVERAK / VICE / SCHRAUBSTOCK		1
2	201.ER259-110	0	DORAZ / STOP PIECE / ANSCHLAG		1
3	30.0509-606	0	VALECEK / CYLINDER / ROLLE	d15	1
4	30.ER259-101	0	STUL / TABLE / TISCH		1
5	30.ER259-102	0	TYC / POLE / STANGE	d10	1
6	30.ER259-103	0	UKAZATEL / INDICATOR / ZEIGER	P 1x15	1
7	30.ER259-114	0	CELIST / JAW / BACKE	ODLITEK	1
8	30.ER259-115	2	CELIST / JAW / BACKE	ODLITEK	1
9	90.001.25.015	0	SROUB IMBUS / ALLEN HEAD BOLT / IMBUSSCHRAUBE	M6X10	4
10	90.001.25.059	0	SROUB IMBUS / ALLEN HEAD BOLT / IMBUSSCHRAUBE	M12X35	2
11	90.001.25.061	0	SROUB IMBUS / ALLEN HEAD BOLT / IMBUSSCHRAUBE	M12X45	2
12	90.001.25.063	0	SROUB IMBUS / ALLEN HEAD BOLT / IMBUSSCHRAUBE	M12X60	2
13	90.001.25.065	0	SROUB IMBUS / ALLEN HEAD BOLT / IMBUSSCHRAUBE	M12X80	2
14	90.001.25.066	0	SROUB IMBUS / ALLEN HEAD BOLT / IMBUSSCHRAUBE	M12X120	2
15	90.003.2D.004	0	SROUB STAVECI / ADJUSTMENT BOLT / STELLSCHRAUBE	SROUB M6X10	1
16	90.100.55.007	0	MATICE / NUT / MUTTER	MATICE _ M12	2
17	90.150.50.004	0	PODLOZKA / WASHER / UNTERLEGSCHEIBE	PODLOZKA 6,4	2
18	90.151.50.002	0	PODLOZKA / WASHER / UNTERLEGSCHEIBE	PODLOZKA 12	1
19	94.008.009	0	PAKA UPINACI / ATTACHMENT LEVER / SPANNHEBEL	M12	1
20	95.014.008	0	LOZISKO / BEARING / LAGER	7206	1
21	95.691.006	0	KOLECKO / WHEEL / ROLLE	RB 8	25

1.ZRUSEN SVERAK 201.ER253-110 A NAHRAZEN 201.ER253-210. 046/ZM053 26.2.2016 SLEZACKOVA

Cislo Sestavy/Number of assembly/Nummer der Baugruppe; Verze (Ver.)/Version/Version; Nazev sestavy/Assembly title/Name der Baugruppe; Pozice (Poz.)/Position/Position; Objednaci cislo/Purchase order number/Bestellnummer; Nazev polozky/Volume title/Name der Position; Rozmer/Stock size/Abmessung

7.34. Svěrák / Vice / Schraubstock

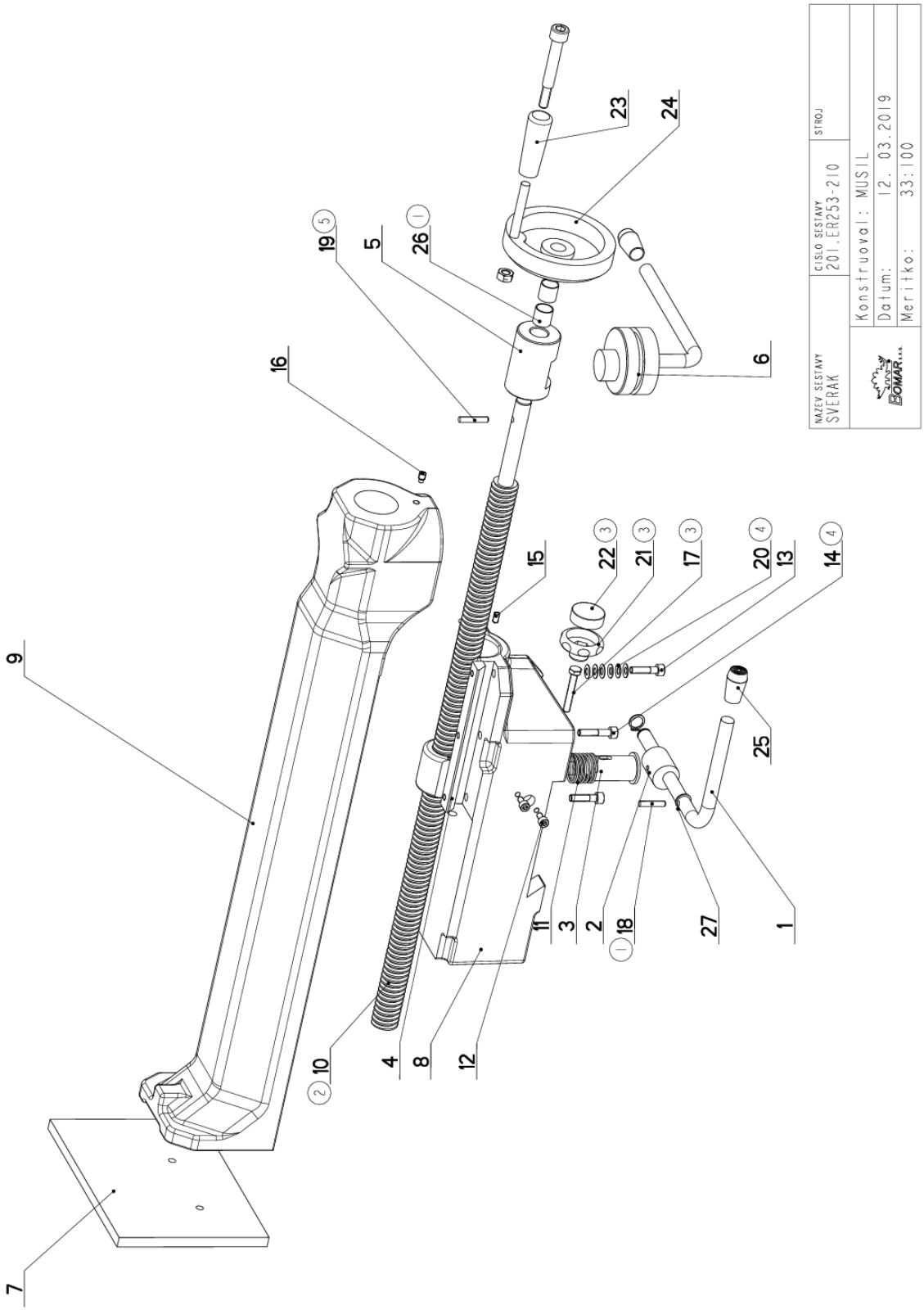

7.35. Kusovník / Piece list / Stückliste - Svěrák / Vice / Schraubstock

Cislo Sestavy	Ver.	Nazev sestavy
201.ER253-210	5	SVERAK/VICE/SCHRAUBSTOCK

Poz.	Objednaci cislo	Ver.	Nazev polozky	Rozmer	Ks
1	30.ER233-013	1	TYC / POLE / STANGE	d 12	1
2	30.ER233-014	1	EXCENTR / CAM / EXZENTER	d 25	1
3	30.ER233-015	3	CEP / LUG / BOLZEN	D 30	1
4	30.ER233-217	1	KLIN / WEDGE / KEIL	HR 15x10	1
5	30.ER253-019	0	POUZDRO / SLEEVE / BUCHSE	d40	1
6	30.ER253-021	0	CEP / LUG / BOLZEN		1
7	30.ER253-116	1	DESKA / BOARD / PLATTE	HR 200x10	1
8	30.ER253-211	2	TELESO SVERAKU / VICE BODY / SCHRAUBSTOCKKÖRPER		1
9	30.ER253-212	4	CELIST POHYBLIVA / MOVING JAW / BEWEGLICHE BACKE	ODLITEK	1
10	31.ER253-018 (2)	0	SROUB / BOLT / SCHRAUBE	TR 24x5 R	1
11	31.M203-012	0	PRUZINA / SPRING / FEDER	d 1.5x25x47x7,5	1
12	90.001.25.007	0	SROUB IMBUS / ALLEN HEAD BOLT / IMBUSSCHRAUBE	M5X10	2
13	90.001.25.019	0	SROUB IMBUS / ALLEN HEAD BOLT / IMBUSSCHRAUBE	M6X25	2
14	90.001.25.020 (4)	0	SROUB IMBUS / ALLEN HEAD BOLT / IMBUSSCHRAUBE	M6X30	1
15	90.002.2D.005	0	SROUB STAVECI / ADJUSTMENT BOLT / STELLSCHRAUBE	SROUB M5X10	1
16	90.004.2D.014	0	SROUB STAVECI / ADJUSTMENT BOLT / STELLSCHRAUBE	SROUB M6X10	1
17	90.005.55.012 (3)	0	SROUB 6HRANNY / 6 SIDED BOLT / SECHSKANTSCHRAUBE	SROUB M6X40	1
18	90.303.0Z.009	0	KOLIK PRUZNY / PIN / BOLZEN	KOLIK 5X25	1
19	90.303.0Z.010 (5)	0	KOLIK PRUZNY / PIN / BOLZEN	KOLIK 5X28	1
20	90.350.0Z.001 (4)	0	TALIROVA PRUZINA / DISC SPRING / TELLERFEDER	12,5X6,2X0,5X0,85	18
21	94.007.012 (3)	0	SROUB PLASTOVY / /		1
22	94.007.103 (3)	0	KRYT / /		1
23	94.010.002	0	RUKOJET / HANDLE / GRIFF		1
24	94.010.004	0	KOLO / WHEEL / UMLENKRAD	d 100/14H7	1
25	94.102.024	0	RUKOJET / HANDLE / GRIFF	465367	2
26	95.700.002 (1)	0	POUZDRO / SLEEVE / BÜCHSE	14X15	2
27	95.800.004	0	SEGR HRIDEL. / OUTSIDE SAFETY RING / SICHERUNGSRING AUSSEN	POJISTNY KROUZEK 12	2

1.PRIDANO 1xPOUZDRO 14x15(95.700.002) . 276/ZM350 31.10.2016 SLEZACKOVA

2.ZRUS.SROUB 30.ER253-018 A NAHR. 31.ER253-018. 226/ZM364 16.11.2017 CERNY

3.ZRUS.PAKA UTAHOVACI 94.008.003 A NAHR.SROUB M6x40(90.005.55.012),SROUB PLASTOVY 94.007.012,KRYT 94.007.103. 011/ZM060 9.2.2018 SLEZACKOVA

4.ZRUS. 1xSROUB M6x25(90.001.25.019) A NAHR. 1xSROUBEM M6x30(90.001.25.020), PRID. 18xTALIROVA PRUZINA(90.350.0Z.001). 218/ZM365 9.10.2018 SZABARI

5.PRID. KOLIK 5x28 90.303.0Z.010,ZRUS.KOLIK 5x20(90.303.0Z.008 A NAHR.KOLIK 5x25(90.303.0Z.009). 066/ZM104 12.3.2019 SZABARI

Cislo Sestavy/Number of assembly/Nummer der Baugruppe; Verze (Ver.)/Version/Version; Nazev sestavy/Assembly title/Name der Baugruppe; Pozice (Poz.)/Position/Position; Objednaci cislo/Purchase order number/Bestellnummer; Nazev polozky/Volume title/Name der Position; Rozmer/Stock size/Abmessung

7.36. Doraz / Stop piece / Anschlag

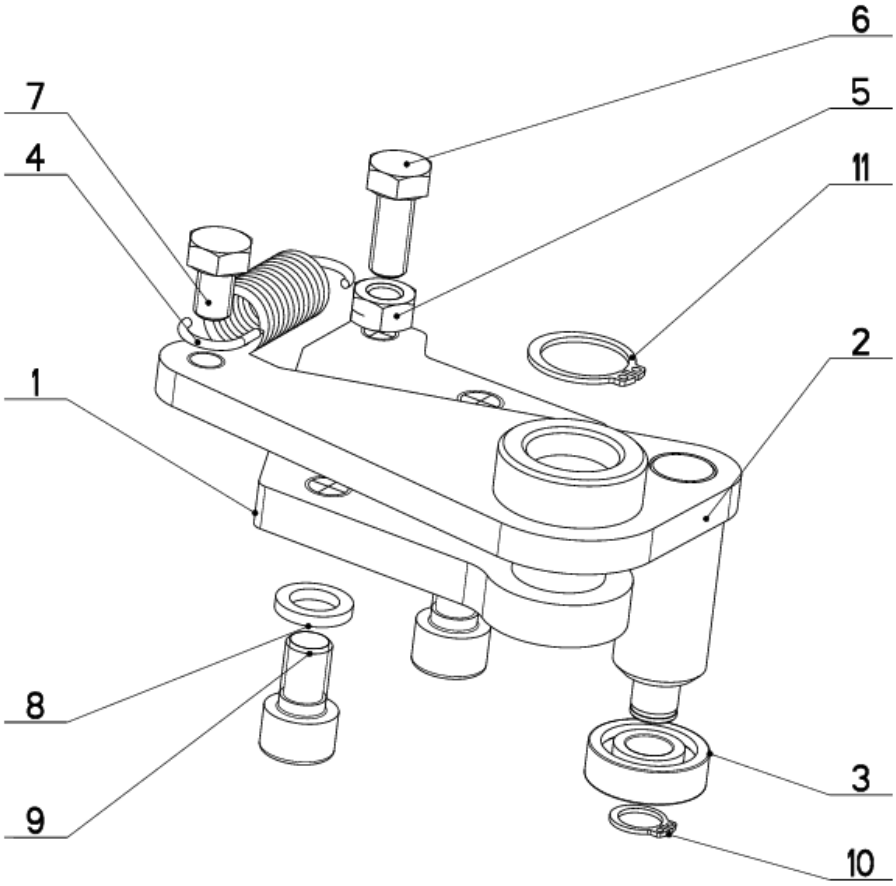

NAZEV SESTAVY	CISLO SESTAVY	STROJ
DORAZ	201.ER259-110	ERG250

Konstruoval:	MUSIL
Datum:	03. 04.2018
Meritko:	4:5

7.37. Kusovník / Piece list / Stückliste - Doraz / Stop piece / Anschlag

Cislo Sestavy	Ver.	Nazev sestavy
201.ER259-110	0	DORAZ/STOP PIECE/ANSCHLAG

Poz.	Objednaci cislo	Ver.	Nazev polozky	Rozmer	Ks
1	30.ER259-112	0	DRZAK / HOLDER / HALTER		1
2	30.ER259-113	0	TYC DORAZU / STOP POLE / ANSCHLAGSTANGE		1
3	95.001.004	0	LOZISKO / BEARING / LAGER	6000 2RS	1
4	31.K303-021	0	PRUZINA / SPRING / FEDER	2.0x16x53x13.5	1
5	90.100.55.005	0	MATICE / NUT / MUTTER	MATICE _ M8	1
6	90.005.55.015	0	SROUB 6HRANNY / 6 SIDED BOLT / SECHSKANTSCHRAUBE	SROUB M8X20	1
7	90.005.55.013	0	SROUB 6HRANNY / 6 SIDED BOLT / SECHSKANTSCHRAUBE	SROUB M8X12	1
8	90.163.00.004	0	PODLOZKA / WASHER / UNTERLEGSCHEIBE	NORD-LOCK	2
9	90.001.25.045	0	SROUB IMBUS / ALLEN HEAD BOLT / IMBUSSCHRAUBE	M10X16	2
10	95.800.003	0	SEGR HRIDEL. / OUTSIDE SAFETY RING / SICHERUNGSRING AUSSEN	POJISTNY KROUZEK 10	1
11	95.800.009	0	SEGR HRIDEL. / OUTSIDE SAFETY RING / SICHERUNGSRING AUSSEN	POJISTNY KROUZEK 20	1

Cislo Sestavy/Number of assembly/Nummer der Baugruppe; Verze (Ver.)/Version/Version; Nazev sestavy/Assembly title/Name der Baugruppe; Pozice (Poz.)/Position/Position; Objednaci cislo/Purchase order number/Bestellnummer; Nazev polozky/Volume title/Name der Position; Rozmer/Stock size/Abmessung

8. Výkresy sestav pro objednání náhradních dílů – volitelné vybavení / Zeichnungen für Bestellung der Ersatzteile - optionale Zubehör / Drawing assemblies for spare parts order – optional accessories

- Při objednávání náhradních dílů vždy uvádějte: typ stroje (např. Ergonomic 320.258 DG), výrobní číslo (např. 125) a rok výroby (např. 1999).

- In die Bestellung der Ersatzteile führen Sie immer an: Maschinentyp (z. B. Ergonomic 320.258 DG), Serien Nr. (z. B. 125) und Baujahr (z. B. 1999).

- For spare parts order, you must always to allege: type of machine (for example Ergonomic 320.258 DG), serial number (for example 125, see cover page) and year of construction (for example 1999).

8.1. Odměřování / Measuring / Gehrungsmessung

Cislo Sestavy
201.ER2518-000

Ver.
0

Nazev sestavy
ODMEROVANI/MEASURING/GEHRUNGSMESSUNG

Poz.	Objednaci cislo	Ver.	Nazev polozky	Rozmer	Ks
1	30.1226-007	1	STERAC / WIPER / ABSTREIFER	BA 18	2
2	30.ER2518-002	0	LISTA / TRIM / LEISTE	HR 18x6	1
3	30.ER2518-005	0	DRZAK / HOLDER / HALTER	P2x108	1
4	30.ER2518-006	0	TYC / POLE / STANGE	HR 70x60	1
5	30.M220-005	0	DRZAK / HOLDER / HALTER	P 2x142	1
6	55.800.009	0	PLECH / PLATE / BLECH	P 0,3x15	1
7	90.013.27.003	0	SROUB / BOLT / SCHRAUBE	M5X10	2
8	91.270.018	0	SNIMAC MAGNET. / MAGNETIC SENSOR / MAGNETSENSOR	IZ16E-000-1-01,6-0	1
9	91.271.005	0	PASKA MAGNETICKA / MAGNETIC TAPE / MAGNETBAND	ELGO MB20-25	1

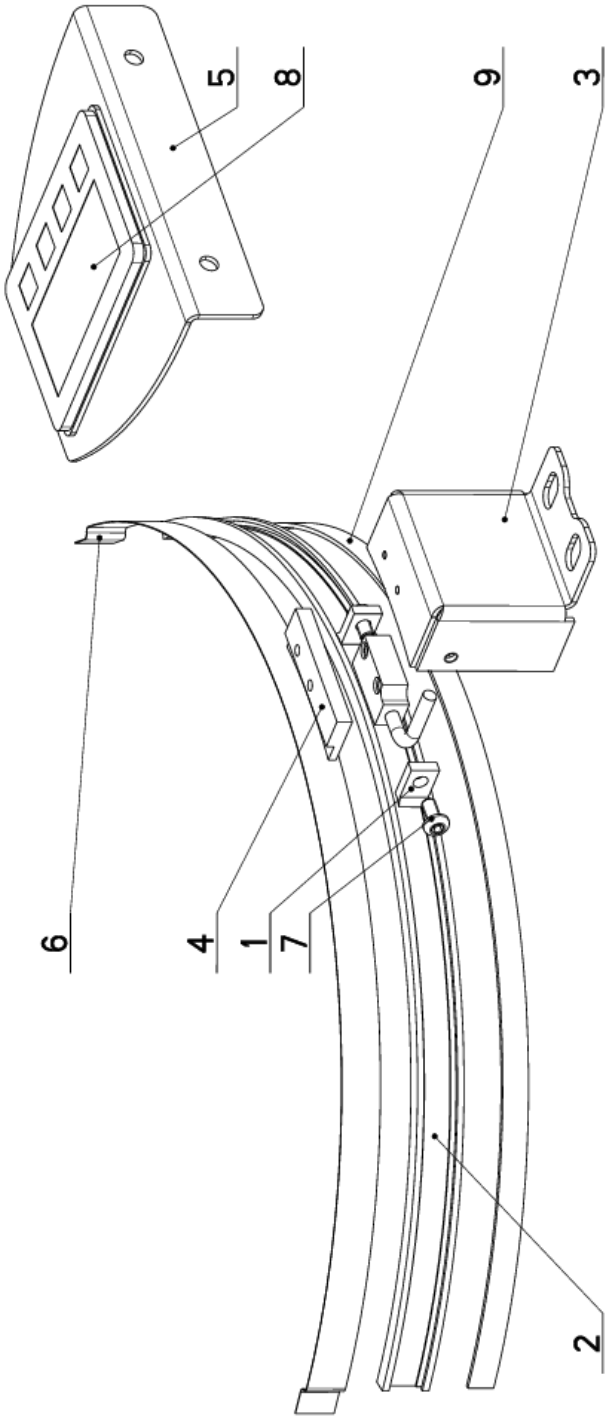

Cislo Sestavy/Number of assembly/Nummer der Baugruppe; Verze (Ver.)/Version/Version; Nazev sestavy/Assembly title/Name der Baugruppe; Pozice (Poz.)/Position/Position;
Objednaci cislo/Purchase order number/Bestellnummer; Nazev polozky/Volume title/Name der Position; Rozmer/Stock size/Abmessung

8.2. Laser-Liner

Cislo Sestavy	Ver.	Nazev sestavy
202.9121-000	0	LASER-UKAZOVATKO/LASER/LASER

Poz.	Objednaci cislo	Ver.	Nazev polozky	Rozmer	Ks
1	30.9204-007	1	DRZAK / HOLDER / HALTER		1
2	202.5012-000	0	LASER-UKAZOVATKO / LASER / LASER		1

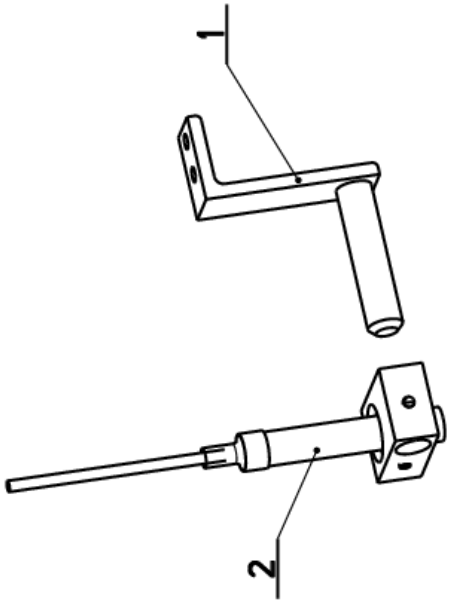

Cislo Sestavy/Number of assembly/Nummer der Baugruppe; Verze (Ver.)/Version/Version; Nazev sestavy/Assembly title/Name der Baugruppe; Pozice (Poz.)/Position/Position;
Objednaci cislo/Purchase order number/Bestellnummer; Nazev polozky/Volume title/Name der Position; Rozmer/Stock size/Abmessung

8.3. Upínání horní / Top clam / Spannvorrichtung oben

Cislo Sestavy
201.ER2514-110

Ver.
0

Nazev sestavy
UPINANI HORNI/TOP CLAM/SPANNVORRICHTUNG OBEN

Poz.	Objednaci cislo	Ver.	Nazev polozky	Rozmer	Ks
1	201.ER257-020	0	UPINANI HORNI / TOP CLAM / SPANNVORRICHTUNG OBEN		1
2	30.2114-315	0	VEDENI / GUIDE / BACKENFUHRUNG	HR 50x50	1
3	30.ER2514-111	0	CELIST / JAW / BACKE	HR 150x12	1
4	30.ER2514-112	0	DESKA / BOARD / PLATTE	HR 80x20	1
5	30.ER2514-116	0	TYC / POLE / STANGE	d 20	2
6	90.001.25.047	0	SROUB IMBUS / ALLEN HEAD BOLT / IMBUSSCHRAUBE	M10X25	1
7	90.005.55.028	0	SROUB 6HRANNY / 6 SIDED BOLT / SECHSKANTSCHRAUBE	SROUB M10X50	1
8	95.800.009	0	SEGR HRIDEL. / OUTSIDE SAFETY RING / SICHERUNGSRING AUSSEN	POJISTNY KROUZEK 20	4

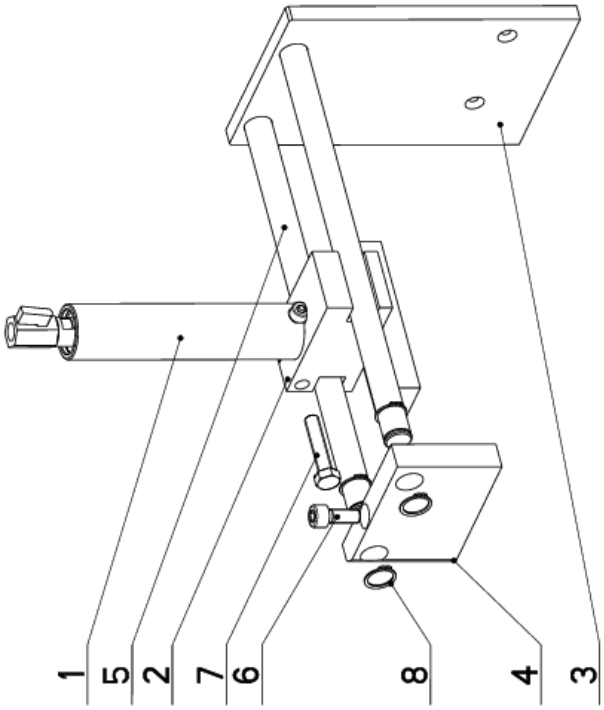

Cislo Sestavy/Number of assembly/Nummer der Baugruppe; Verze (Ver.)/Version/Version; Nazev sestavy/Assembly title/Name der Baugruppe; Pozice (Poz.)/Position/Position;
Objednaci cislo/Purchase order number/Bestellnummer; Nazev polozky/Volume title/Name der Position; Rozmer/Stock size/Abmessung