Series **Ergonomic**

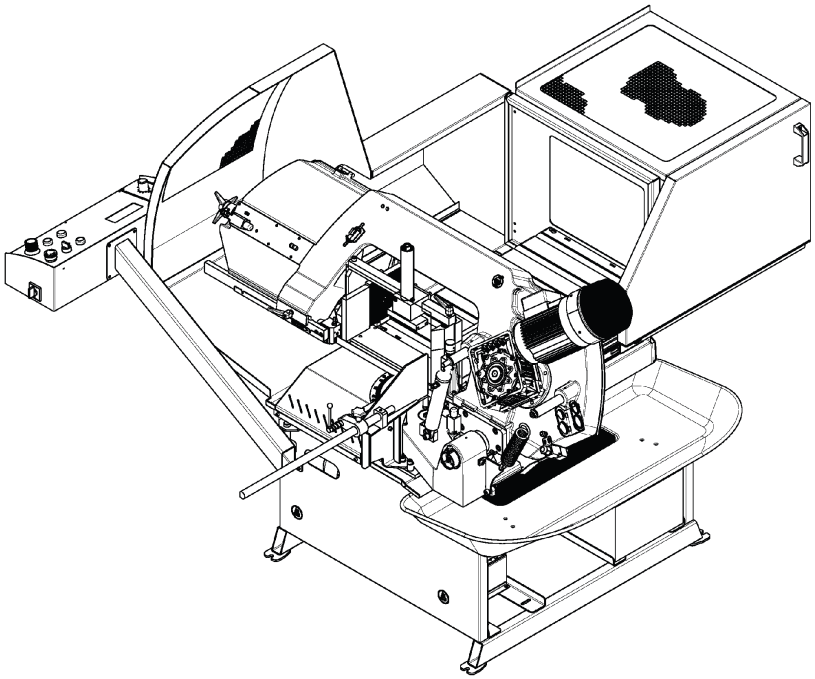

Ergonomic 320.258 GANC

Operating instructions

Before transporting and using the machine, please read the instructions thoroughly!

Seriové číslo / Serien Nummer / Serial Number _____

Service and information

Your BOMAR dealer:

Direct BOMAR contact:

BOMAR spol. s r.o.
Těžební 1236/1
62700 Brno
Czech Republic, EU

telefon: +420 – 533 426 100
fax: +420 – 533 426 109
e-mail: info@bomar.cz
www: http://www.bomar.cz

We are available:

Mondays to Fridays 7^{00} – 16^{00}

Version:

1.05 / Feb.2021

rev. 1

EC/EU Declaration of Conformity

[1) 2)] We:

BOMAR, spol. s r.o.
Těžební 1236/1
627 00 Brno, Czech Republic
Id. No: 48908827

declare herewith

that the following designated device based on its conception and construction as well as the design launched by us meets the relevant basic safety requirements of the decrees of the government.
This statement applies exclusively to the machine device in conditions in which it was brought to the market. It does not apply to parts subsequently added by the end user or to modifications performed subsequently by the end user.
In the event of any device modification not approved by us this declaration shall lose its validity

Name:	**Band Saw**
Type :	**Ergonomic 320.258 GANC**
Serial number:	011 – 100 000
Manufacturer	**BOMAR, spol. s r.o., Těžební 1236/1, 627 00 Brno**

Product data

Determination:	for cross dividing and cutting of rolled and towed bars and profiles made of steel, stainless steel, non-ferrous metals and plastics
Description:	Stand, table, cutting unit with the saw band and drive, clamping device, cooling system, el. switch board with control panel.
	Pneumatic *NO* ☒ *YES* ☐ Hydraulic *NO* ☐ *YES* ☒ Control system *NO* ☐ *YES* ☒
Technical data:	Cutting rate 20-120 m.min-1
	Cutting angle 0° to 60°
	Total dimensions in mm (l×w×h) 2650x2050x1750
	Total power requirement 2,5 kW
	Weight 700 kg

Documentation:
Technical documentation for this machine device was elaborated in compliance with Government regulation no. 176/2008, Annex 7, part A.

The device meets relevant requirements of the given directives: **2006/42/EC**
2014/30/EU

The applied harmonized standards, National standards and technical specifications:

ČSN EN ISO 12100:2011	ČSN EN ISO 16093:2017	ČSN EN ISO 13857:2008
ČSN EN ISO 4413:2011	ČSN EN ISO 4414:2011	ČSN EN 60204-1 ed.3:2019
ČSN EN 55011 ed.3+A1:2011	ČSN EN 61000-6-2 ed.3:2006	ČSN EN 61000-6-4 ed.2+A1:2011

The product is safe on condition of the common and determined usage.

The conformity judging was performed according to §12, art..3a), of the Law no. 22/1997 Coll. as amended.

BOMAR, spol. s r.o.
Těžební 1236/1, 627 00 Brno
Czech Republic
IČO: 48908827
DIČ: CZ48908827

25.02.2021

Ausstellungsort, Datum

Alfred Pichlmann, Managing Director

Name and function of the responsible subject, signature

1) Name, address and identification number of the subject issuing the conformity declaration (producer of importer)
2) Person authorized to complete the technical documentation
3) The authorized or accredited body co-operating on the conformity judging

!	If the equipment is installed without safety equipment offered by BOMAR, spol. s ro or its agents and used by the customer (or buyer) then EC declaration loses validity. EC Declaration of conformity is valid only if customer (buyer) installed the BOMAR safety equipment with the machine or with some other with equivalent safety device in accordance with current applicable regulations and standards. All machine elements and components that were built into the device by BOMAR, spol. s ro have been declared "identical" to a safety device, as offered by BOMAR, spol. s ro or its agents.

Content

1. BEZPEČNOSTNÍ POKYNY / SAFETY NOTES / SICHERHEITSHINWEISE 9

1.1. Machine determination 11
1.2. Protective clothing and personal safety 11
1.3. Safety notes for machine operator 12
1.4. Safety notes for the servicing and repairs 13
1.4.1. Safety notes for the servicing and repairs on hydraulic unit 13
1.5. Safety notes for the cooling 14
1.5.1. Instructions for first aid 14
1.6. Safety instructions for laser barriers 14
1.7. Safety machine accessories 14
1.7.1. Emergency Stop Switch 15
1.7.2. Arm cover 15
1.7.3. Saw band covers 16
1.7.4. Feeding vice covers 17
1.7.5. Saw band stretching and rupture inspection 20
1.7.6. Prevention of leakage of coolant 21
1.8. Umístění bezpečnostních značek / Verteilung der Sicherheitszeichen / Position of safety symbols 22
1.9. Umístění štítku stroje / Maschinenschild position / Position of machine label 23

2. DOKUMENTACE STROJE / MACHINE DOCUMENTATION / DOKUMENTATION DER MASCHINE 25

2.1. Technická data / Technische Daten /Technical data 27
2.2. Rozměrové schéma / Aufstellzeichnung / Installation diagram 29
2.3. Popis / Beschreibung / Description 30
2.4. Transportation and stocking 31
2.4.1. Conditions for transportation and stocking 31
2.4.2. Transport and stocking preparations 31
2.4.3. Transport 31
2.4.4. Stocking 32
2.5. Activation 33
2.5.1. Machine working conditions 33
2.5.2. Band saw unpacking and assembling 33
2.5.3. Installation of the length stop for the material length setting 33
2.5.4. Attachment of the cooling liquid tub 35
2.5.5. Kotevní plán / Verankerungsplan / Grounding plan 37
2.5.6. Machine installing and leveling 38
2.5.7. Electrical connection 38
2.5.8. Check the direction of the saw band 39
2.5.9. Filling of the cooling system 39
2.6. Machine functions check 39
2.7. Machine disposal after lifetime 39
2.8. Saw band 40
2.8.1. Saw band size 40
2.8.2. Selection of the saw band tooth system 40
2.8.3. Saw band running-in 40
2.8.4. Table for teeth selection 41

3. OVLÁDÁNÍ STROJE / MACHINE CONTROL / BEDIENUNG DER MASCHINE 43

3.1. Starting the band saw 45
3.2. Control panel - description 46
3.3. Machine referring 49
3.4. Machine control in manual mode 51
3.4.1. Meaning of symbols on the manual mode screens 51
3.4.2. Manual machine operation in the manual mode 52
3.4.3. Execution of semi-automatic cut in the manual mode 53
3.4.4. Interruption of semi-automatic cut 57
3.5. Machine control in automatic mode 58
3.5.1. Automatic cycle 58
3.5.2. Interruption of automatic cut 65
3.5.3. Loading material before starting the automatic cycle 67
3.5.4. Course of material loading in the automatic cycle - risk of collisions 69
3.6. Machine setup 73
3.6.1. SETUP 73
3.6.2. SERVICE 75
3.7. Error messages 77

3.8. Band saw adjusting....78
3.8.1. Adjusting the cutting angle....78
3.8.2. Cutting speed setting....79
3.8.3. Speed adjusting of the arm lowering....79
3.8.4. Optimal adjusting of the guide cubes span....79
3.8.5. Vice jaws setting....80
3.8.6. Setting the height of the saw arm over the material....81
3.8.7. Brush adjustment....82
3.8.8. Cutting pressure regulation....83
3.8.9. Bundling system setting (optional accessory)....84
3.9. Material insertion....88
3.9.1. Safety notes....88
3.9.2. Handling agent selection....88
3.9.3. Material insertion....88
3.9.4. Bundle material cutting....88

4. ÚDRŽBA STROJE / MACHINE MAINTENANCE / WARTUNG....91

4.1. Saw band dismantling....93
4.2. Saw band installation....94
4.3. Saw band stretching and inspection....97
4.3.1. Saw band stretching....97
4.4. Setting of the saw band run at the tensioning wheel....98
4.4.1. Saw band inspection....98
4.5. Adjustment....99
4.5.1. Saw band run adjustment....99
4.5.2. Hard metal guides adjustment on the machine....99
4.5.3. Guiding cube adjustment....100
4.5.4. Adjusting the limit switch of the saw band stretching....101
4.5.5. Saw frame lower position stop adjustment....101
4.5.6. Adjustment of the limit switch of saw frame lower stop....102
4.5.7. Adjustment of a throttle valve....103
4.5.8. Adjustment of the regulating pressure to the cut....104
4.6. Cooling agents and chip disposal....105
4.6.1. Coolant inspection....105
4.6.2. Cooling liquid preparation....106
4.6.3. Chips disposal....106
4.7. Gearbox oils and greases....107
4.7.1. Gearbox oils....107
4.7.2. Lubrication greases....108
4.7.3. Lubrication....108
4.7.4. Hydraulic oils....109
4.7.5. Hydraulic unit service....110
4.8. Machine cleaning....111
4.9. Worn pieces replacement....112
4.9.1. Hard metal guides replacement....112
4.9.2. Saw band guiding rollers replacement....113
4.9.3. Stretching wheel replacement....115
4.9.4. Driving wheel replacement....117
4.9.5. Round brush replacement....118

5. ZÁVADY / TROUBLESHOOTING / STÖRUNGEN.... 119

5.1. Mechanical problems....121
5.2. Electric problems....123
5.3. Hydraulic problems....124

6. SCHÉMATA / SCHEMATA / SCHEMATICS 127

6.1. Elektrické schema /Elektroschema /Wiring diagrams....129
6.2. Hydraulické schéma /Hydraulisches Schéma / Hydraulic diagram....154

7. VÝKRESY SESTAV PRO OBJEDNÁNÍ NÁHRADNÍCH DÍLŮ/ ZEICHNUNGEN FÜR BESTELLUNG DER ERSATZTEILE / DRAWING ASSEMBLIES FOR SPARE PARTS ORDER.... 157

7.1. Ergonomic 320.258 GANC....158
7.2. Kusovník / Piece list / Stückliste - Ergonomic 320.258 GANC....159
7.3. Ergonomic 320.258 GANC....160
7.4. Kusovník / Piece list / Stückliste - Ergonomic 320.258 GANC....161
7.5. Odměřování / Measuring / Gehrungsmessung....162
7.6. Kusovník / Piece list / Stückliste - Odměřování / Measuring / Gehrungsmessung....163
7.7. Upínání horní / Top clam / Spannvorrichtung oben....164
7.8. Kusovník / Piece list / Stückliste - Upínání horní / Top clam / Spannvorrichtung oben....165
7.9. Válec upínací / Fixing cylinder / Spannzylinder....166
7.10. Kusovník / Piece list / Stückliste - Válec upínací / Fixing cylinder / Spannzylinder....167

7.11. Kryty / Covers / Abdeckungen....168
7.12. Kusovník / Piece list / Stückliste - Kryty / Covers / Abdeckungen....169
7.13. Konzola otočná / Turnable consol / Drehkonsole....170
7.14. Kusovník / Piece list / Stückliste - Konzola otočná / Turnable consol / Drehkonsole...171
7.15. Kartáč / Brush / Burste....172
7.16. Kusovník / Piece list / Stückliste Kartáč / Brush / Burste....173
7.17. Rameno / Shoulder / Sägerahmen....174
7.18. Kusovník / Piece list / Stückliste - Rameno / Shoulder / Sägerahmen....175
7.19. Pohon / Drive / Antieb....176
7.20. Kusovník / Piece list / Stückliste - Pohon / Drive / Antieb....177
7.21. Vedení pásu / Belt guide / Sägebandführung....178
7.22. Kusovník / Piece list / Stückliste - Vedení pásu / Belt guide / Sägebandführung¨....179
7.23. Kostka vodící / Lead cube / Führungsklotz....180
7.24. Kusovník / Piece list / Stückliste Kostka vodící / Lead cube / Führungsklotz....181
7.25. Kostka vodící / Lead cube / Führungsklotz....182
7.26. Kusovník / Piece list / Stückliste Kostka vodící / Lead cube / Führungsklotz....183
7.27. Regulace přítlaku / Pressure regulation / Schnittdruckregulation....184
7.28. Kusovník / Piece list / Stückliste Regulace přítlaku / Pressure regulation / Schnittdruckregulation....185
7.29. Napínání / Tensioning / Spannung....186
7.30. Kusovník / Piece list / Stückliste Napínání / Tensioning / Spannung....187
7.31. Válec zvedací / Lifting cylinder / Hebezylinder....188
7.32. Kusovník / Piece list / Stückliste Válec zvedací / Lifting cylinder / Hebezylinder....189
7.33. Skluz / Slide / Rutsch....191
7.34. Podstavec / Base / Untersatz....192
7.35. Kusovník / Piece list / Stückliste – Podstavec / Base / Untersatz....193
7.36. Chlazení / Cooling / Kühlung....194
7.37. Kusovník / Piece list / Stückliste - Chlazení / Cooling / Kühlung....195
7.38. Ovladací panel / Control panel / Bedienpult....196
7.39. Kusovník / Piece list / Stückliste - Ovladací panel / Control panel / Bedienpult....197
7.40. Deska / Board / Platte....199
7.41. Vana / Tank / Wanne....200
7.42. Kusovník / Piece list / Stückliste - Vana / Tank / Wanne....201
7.43. Rozvaděč elektro / Electro distributor / Schaltschrank....203
7.44. Svěrák / Vice / Schraubstock....204
7.45. Kusovník / Piece list / Stückliste - Svěrák / Vice / Schraubstock....205
7.46. Válec upínací / Fixing cylinder / Spannzylinder....206
7.47. Kusovník / Piece list / Stückliste - Válec upínací / Fixing cylinder / Spannzylinder....207
7.48. Trať / Track / Bahn....208
7.49. Kusovník / Piece list / Stückliste - Trať / Track / Bahn....209
7.50. Podavač / Feeder / Vorschub....210
7.51. Kusovník / Piece list / Stückliste - Podavač / Feeder / Vorschub....211
7.52. Válec upínací / Fixing cylinder / Spannzylinder....212
7.53. Kusovník / Piece list / Stückliste - Válec upínací / Fixing cylinder / Spannzylinder....213
7.54. Pohon / Drive / Antieb....214
7.55. Kusovník / Piece list / Stückliste - Pohon / Drive / Antieb....215
7.56. Ložisko / Bearing / Lager....217
7.57. Upínání horní / Top clam / Spannvorrichtung oben....218
7.58. Kusovník / Piece list / Stückliste - Upínání horní / Top clam / Spannvorrichtung oben219
7.59. Páka / Lever / Hebel....221

1. Bezpečnostní pokyny / Safety notes / Sicherheitshinweise

The operating instructions must be read by the person, who keeps in touch with the machine before transportation, installation, using, servicing, reparation, stocking or removal!

The operating instructions include relevant information. The operator must familiarise himself with the install and operation, safety notes and machine servicing, because reliability and service life must be reached. The operating instructions must avoid risks, which are linked to work on the machine.

The machine operator must be familiar with the installation, operation and maintenance of machines and also with the safety instructions. Before transporting and using of the machine, please read the instructions thoroughly!

Attention!
The operating instructions must be available at the machine! Keep the operating instructions in good condition!

1.1. Machine determination

The **Ergonomic 320.258 GANC** band saws are intended for transverse cutting and shortening of rolled and drawn bars and sections made from steel, stainless steel, non-ferrous metals and plastics, **with optional angle cuts of 0° to +60°. It is possible to cut angles to +45° in the automatic mode, angles bigger than +45° or equal to+45° can be cut only in the manual mode– without usint of the feeder.**

Combustible materials are excluded from cutting! Any other usage and operation outside this range are unauthorized and the manufacturer/supplier does not accept any responsibility for any damages resulting from such misuse. **The operator has full responsibility!**

The machine is equipped with safety and protective measures for both the operator and the machine to be protected. Nevertheless, these measures cannot prevent all injuries. All personnel must read this chapter and understand it, before they start to work on the machine. **Always follow the instructions about work safety!** The personnel must take into account other aspects of the risk, which include the conditions of the working place and the material.

1.2. Protective clothing and personal safety

Wear fitting clothes! Loosely fitting clothes may be caught in the moving machine parts and cause serious injuries.

Wear protective gloves! Material cuts and saw band have sharp edges and may cause injuries.

Attention!
Gloves can be worn only when manipulating with the material or replacing parts! The machine and its accessories must be inactive!
If the machine is running, you must not wear gloves! There is a higher risk of getting caught in the moving machinery!

Wear protective shoes with non-skid soles! Unsuitable shoes may cause balance loss and following injury. Falling pieces may cause serious injuries too.

Wear protective goggles! Chips and cooling liquid may damage your eyes.

Always wear ear protection! Most of the machines emit up to 80 dB and may damage your hearing.

Do not wear jewellery and always tie back long hair! Moving machine parts can catch jewellery or loose hair and may cause serious injuries.

Operate the machine only when you are fit enough to work. Illnesses or injuries diminish concentration. **Avoid machine work, which may compromise the safety of you and your colleagues!**

Attention!
Mind the safety signs on the machine. Do not remove or damage them!

1.3. Safety notes for machine operator

Follow the instructions and orders about work safety!
Read the operating instructions, before you start to work on the machine! Keep the operating instructions in good condition!

Machine can be operated only by one person.

Machine operator is responsible for other people present near the machine.

Die Person, die gerade die Maschine mittels von Maschinensteuerungsanlagen bedient (Bedienungspult und andere Bedienungselemente), darf selbst oder mittels anderer Personen gleichzeitig auf eine andere Weise mit der Maschine oder dem Material, das von dieser Maschine geschnitten oder anders verarbeitet wird, manipulieren

Attention!
Machine can be operated by person older than 18 years!
Machine can be operated only by a person physically and mentally fit for this activity

Close covers before starting the machine and check, if the covers are not damaged. Damaged covers must be repaired or changed immediately. Do not start the machine, if the cover is removed!

Check, if the electric cables are not damaged.

Attention!
Do not connect the machine to electricity if the covers are removed. Do not touch the electrical equipment or wiring.

- Do not hold the material for clamping in the vice and when cutting!
- Do not operate the buttons and switches on the control panel, when you have gloves!
- For machine starting take care, that there is nobody in the working area of the machine (the working area of the vice, the saw band, the saw arm etc.).
- Under no circumstances touch the rotating elements.
- Work on the machine only when the machine is in good condition!
- Check at least once in a shift, if the machine is not damaged. If the machine is damaged, you must bring the machine to a halt and inform your superior!
- Keep your working area clean!
- Ensure sufficient lighting in the working area.
- Take off the spilt water or the oil from the floor and dry it.

- Do not touch the cooling liquid with bare hands!
- Do not set the nozzle of the cooling liquid, when the machine is started running.
- Do not remove the chips from the working area of the machine, when the machine is running!
- Do not use compressed air for the machine cleaning or for the chip removal!
- Use the protective instruments for chip removal!
- In the event of leakage of the cutting fluid to places other than those specified, the machine must be switched off by means of the main switch and the liquid removed from these places

1.4. Safety notes for the servicing and repairs

Attention!
Only a qualified professional can carry out the servicing and repairs of the electrical equipment (e.g. fuse replacement etc.)! Take special care during the work with electrical equipment. High voltage shock can have fatal consequences! Always follow the work safety instructions! Otherwise, there is possibility of heavy injury!

Switch off the main switch and lock it, before you start service work! Otherwise, there is a possibility of starting the machine accidentally.

Take care when manipulating the frequency converter. It is still energized for 20 minutes after machine shutdown.

Only qualified and authorized person can do the servicing and repairs.

Always adhere to the safety instructions

For parts replacement, use only those, which are identical with the originals. Otherwise, there is possibility of health hazard.

Use only recommended types of hydraulic oils, oils and lubricants!

Do not remove lock the limit switches or safety equipment!

Any use of the saw, accessories or machine parts other than that intended by the BOMAR, spol. s r.o. company is not permitted. The guarantee on this product will be lost afterward and BOMAR, spol. s r.o. takes no responsibility for damage caused.

Do not start the machine if all covers are not in place.

1.4.1. Safety notes for the servicing and repairs on hydraulic unit

Attention!
Repair and securing of hydraulic equipment is performed only by a qualified person who has sufficient number of users to manage specific tasks within the permit procedure. If you have sufficient information, do not interfere with the hydraulic circuit, contact the manufacturer or the manufacturer's authorized service.

Compliance with the the principles of cleanliness is basic requirement for trouble-free operation of hydraulic equipment. Hydraulic components are products made with high accuracy, and any contamination leads to a reduction lifetime or even malfunction. The consequences are very difficult to remove and expensive.

Always use clean tools. Parts and fasteners, which are part of a hydraulic circuit, never put away the dirty surface. The best cleaning agent is crepe paper, because the fibers of the cleaning cloths can also cause malfunction.

Protective cap from the threaded chamber remove just before the assembly of the unit.

Hoses and pipes before mounting flush with gasoline or other cleaning agent and blow compressed air.

All fittings must be properly tightened. However, do not raw power.

1.5. Safety notes for the cooling

Attention!

- *When handling the coolant always keep to the work safety directives and instructions of the manufacturer.*
- *When handling cooling agents always wear safety fluid-proof gloves!*
- *Wear protective goggles!*
- *Cooling liquid can get in contact with your eyes and may cause permanent severe injuries*

1.5.1. Instructions for first aid

1. Pull off and safely remove polluted, soaked clothing.
2. If inhaled, go out on fresh air or look for first aid treatment.
3. Wash with water and eventually treat with crème any points of contact with the skin.
4. Flush your eyes with water and seek out a doctor.
5. If swallowed, drink a lot of water and induce vomiting. Look for medical help

1.6. Safety instructions for laser barriers

Machine for its function using laser sensors for control purposes.

Laser sensors for control purposes are located on the feeder.

In the vicinity of the laser ray source is installed security sticker.

It is forbidden to look to the laser ray!

The laser at this machine is 1M class.

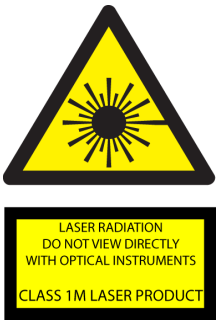

Attention!
It is necessary for correct functionality of a laser to regularly check the patency of the laser ray on the sensor and to clean the laser from impurities (clean rag + spirit) after each shift. Be careful during the cleaning in order the laser was not been scratched and broken!

1.7. Safety machine accessories

The machine is equipped with safety accessories. They protect the operator from injuries and the machine from damage. The safety accessories are blocking accessories, emergency switches and covers.

Check the function of the safety accessories once a week. If the safety accessories are not fulfilling their function, stop your work and repair or change the safety accessories.

Enhanced risk!
Do not come into or intervene in the cutting area. Otherwise, there is a possibility of heavy injury.

1.7.1. Emergency Stop Switch

Emergency Stop Switch is used for emergency switching – off the machine in case defect or health hazard.

By pressing Emergency Stop Switch will immediately stop all dangerous machine movements.

If any damages or fault appears, immediately press Emergency Stop Switch!

It is possible to release the pressed button by twisting of the upper part of the button.

The Emergency Stop Switch is placed at the control panel of the machine..

1.7.2. Arm cover

If the cover is opened during operation, the limit switch is opened and the band saw is stopped. The machine cannot be run with the arm cover open even in the service mode.

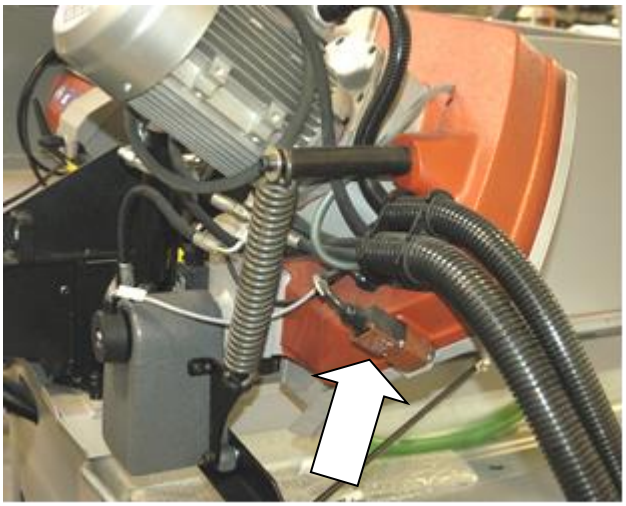

Make sure the arm cover is closed before starting the machine!

1.7.3. Saw band covers

These three covers cover the band of the saw

- from the moveable guiding cube to the arm

- from the jaw of the vice to the arm (both sides)

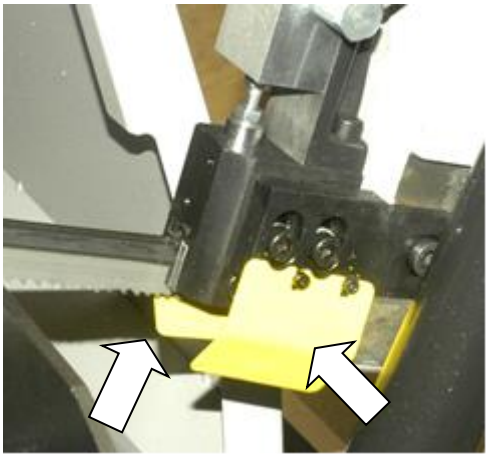

Never turn the band drive on, if these covers are not mounted

1.7.4. Feeding vice covers

These covers avoids the service workers in entrance to the feeding vice during operation. The service workers are protected before injury.

Sliding feeder cover (side and upper)

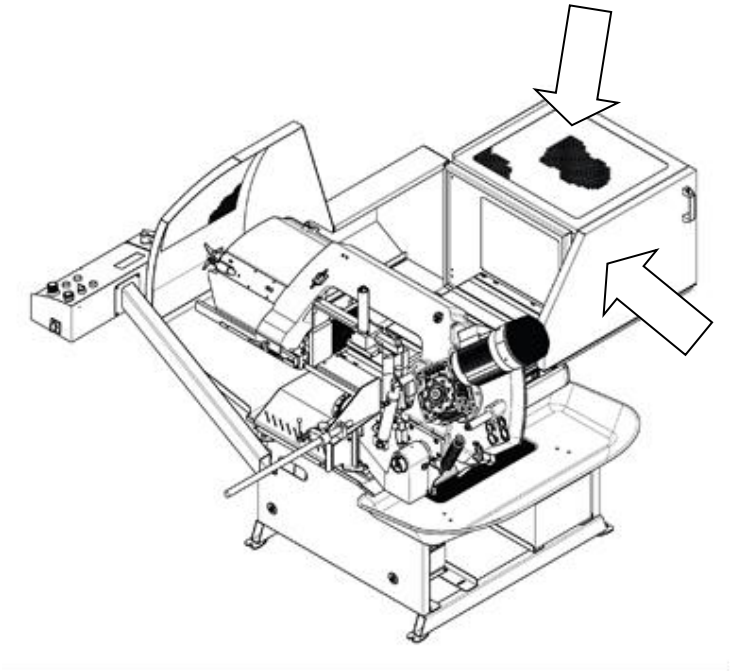

The cover is joined to the saw arm and the cover changes its position according to turning of the arm to required cutting angles, so that the feeder is sufficiently protected and at the same time the covers do not hinder the saw arm turning.

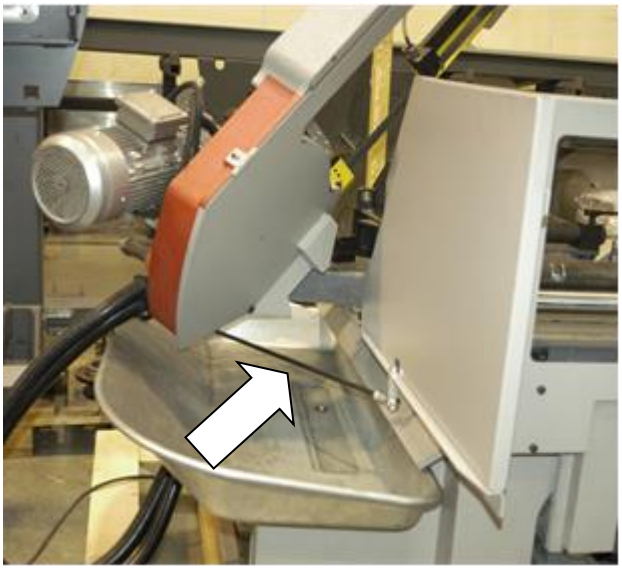

Openable cover locked with a lever

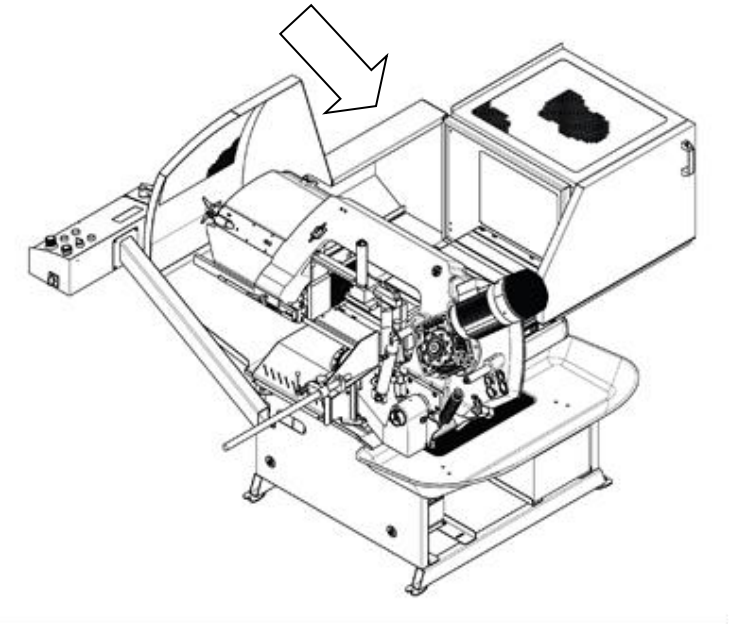

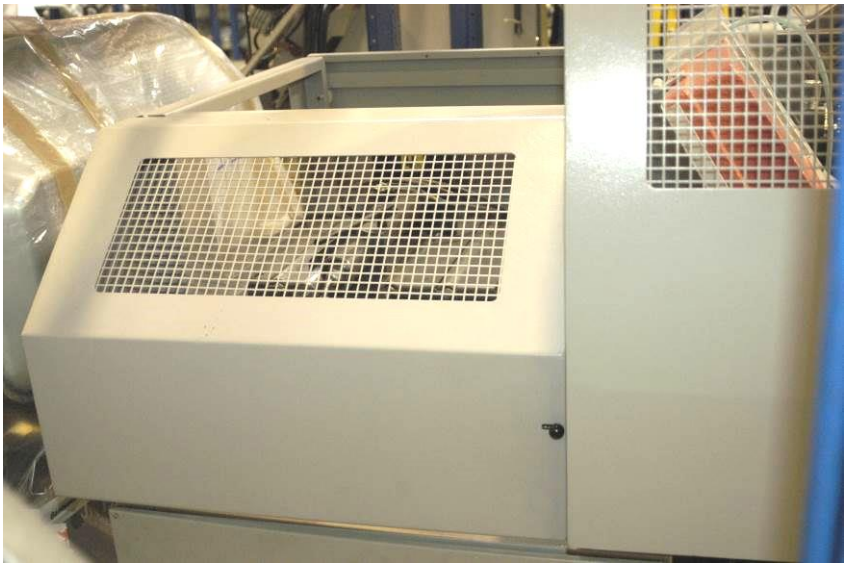

If the cover is opened during cutting, the limit switch is unfastened (see. arrow), the machine is stopped. The band saw is not possible start in set mode.

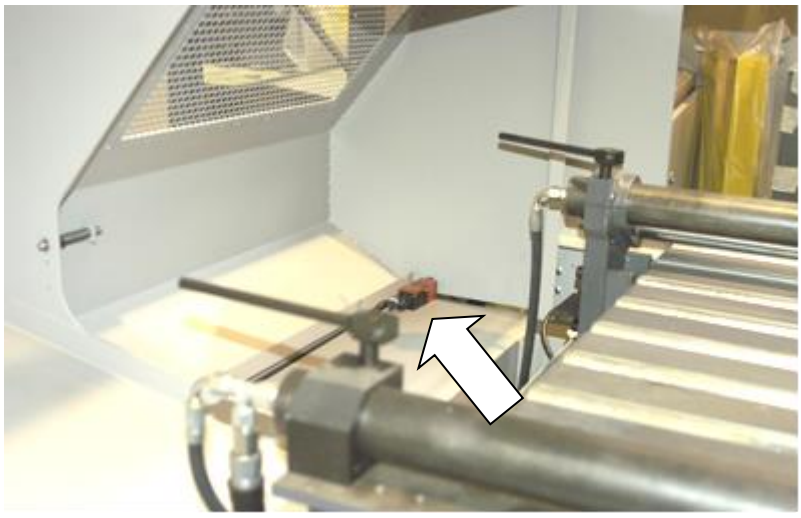

If the machine or feeder cannot be started and no other causes are known, first of all carefully check whether the lockable covers are closed!

Fixed cover

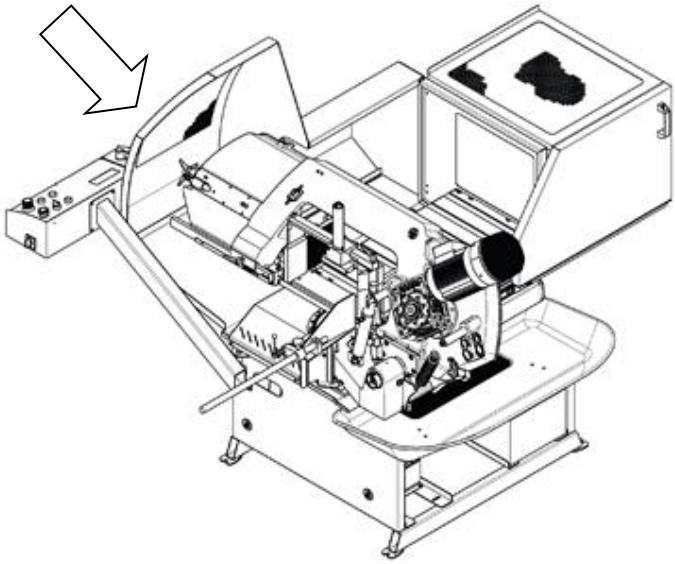

The machine can be put back into operation only after all covers have been installed and closed!

1.7.5. Saw band stretching and rupture inspection

This device checks the saw band stretching and causes an immediate machine shut – down in case the band ruptures.

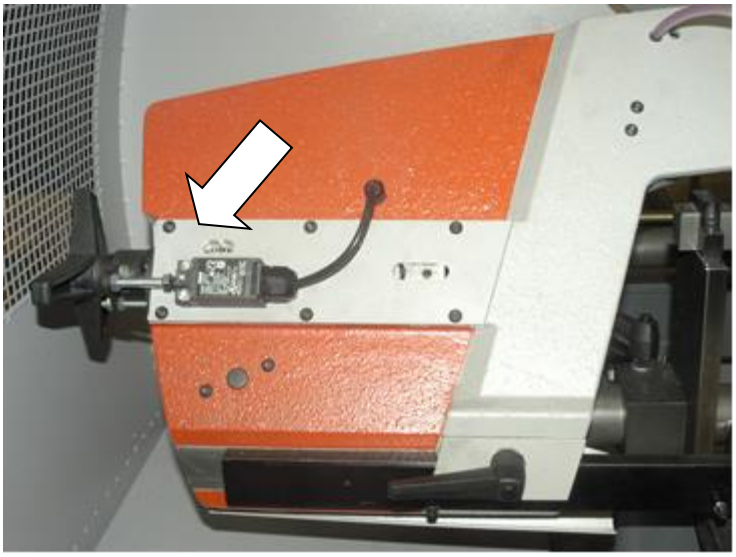

The device contains a limit switch. Its setting is described in the chapter Machine maintenance. Check the stretching carefully and periodically and adjust it eventually.

1.7.6. Prevention of leakage of coolant

It is forbidden to operate the machine if the tank for draining of coolant is not installed!

if the tank for draining of coolant is not installed, there is a risk of leakage of coolant to the surroundings of the machine and and the breakdown of the coolant into the electrical installation of the machine.

In the event of leakage of the cutting fluid to places other than those specified, the machine must be switched off by means of the main switch and the liquid removed from these places.

1.8. Umístění bezpečnostních značek / Verteilung der Sicherheitszeichen / Position of safety symbols

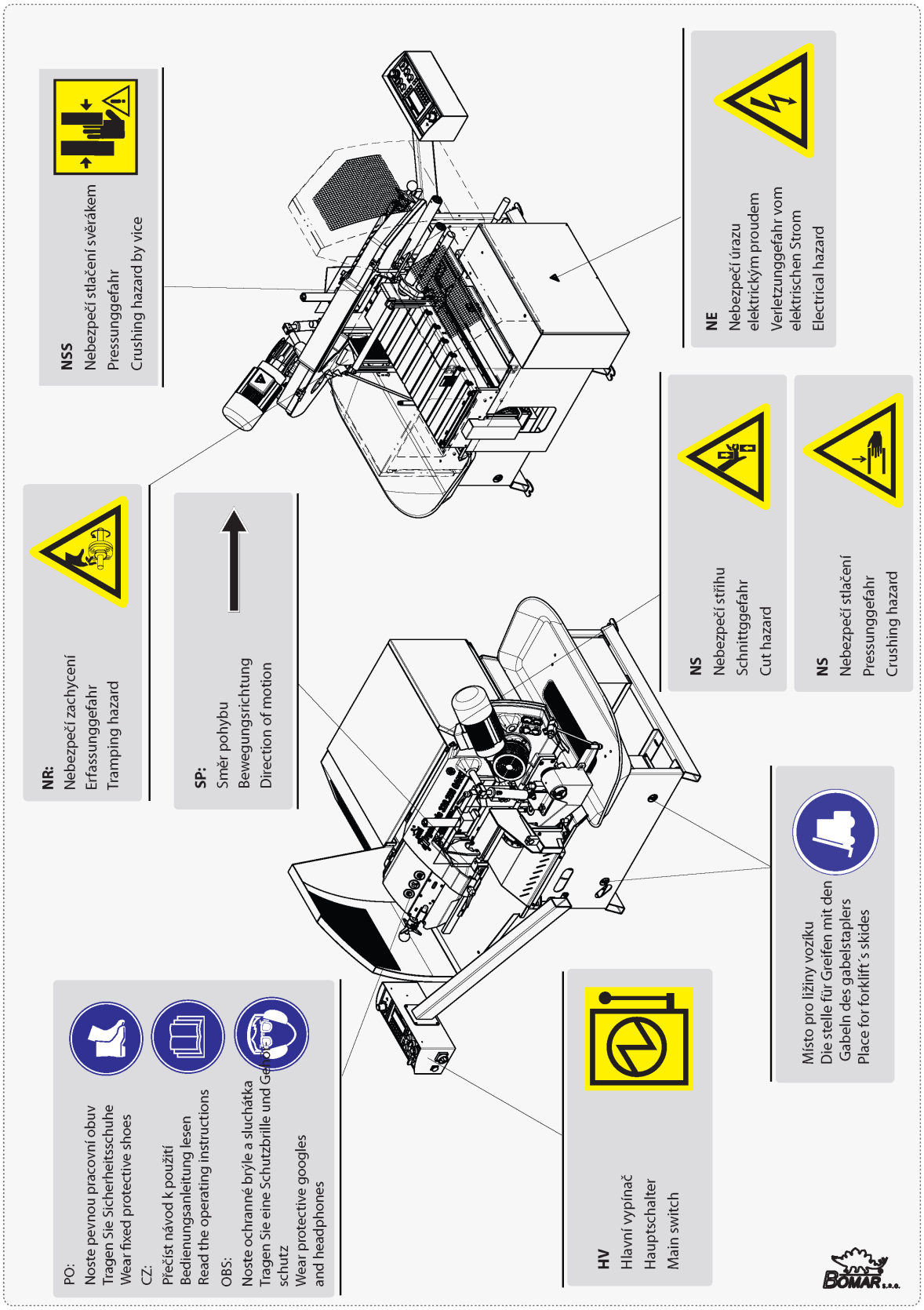

1.9. Umístění štítku stroje / Maschinenschild position / Position of machine label

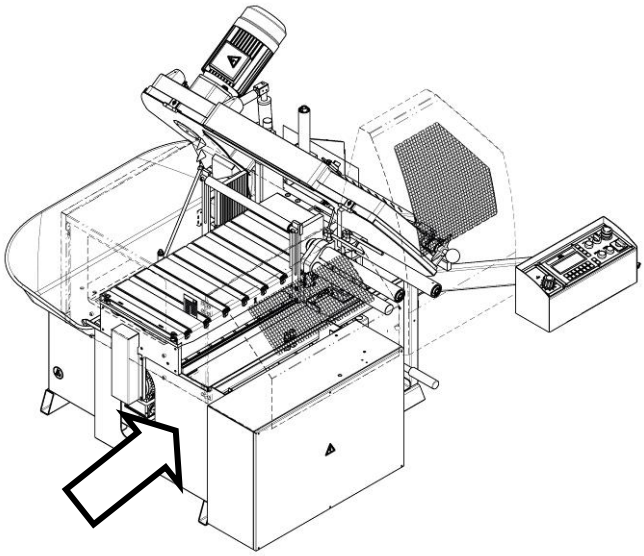

2. Dokumentace stroje / Machine documentation / Dokumentation der Maschine

2.1. Technická data / Technische Daten /Technical data

Hmotnost stroje / Maschinengewicht / Machine weight:	
• Hmotnost / Gewicht / Weight	700 kg
Rozměry stroje / Maschinengröße / Machine size :	
• Délka / Länge / Lenght	2650 mm
• Šířka / Breite / Width	2050 mm
• Výška / Höhe / Height	1750 mm
Elektrické vybavení / Elektrische Ausrüstung / Electical equipment:	
• Napájení / Versorgungsspannun / Supply voltage	~ 3 x 400V, 50Hz, TN-C-S
• Příkon / Gesamptschlusswert / Total Input	2,5 kW
• Max. jištění / Max. Vorschaltsicherung / Max. Fuse	10 A
• Krytí / Schutzart / Protection	IP 54
Akustický tlak / Schalldruckpegel / Acoustic pressure:	
• Ergonomic 320.258 GANC	L_{Aeqv} = 70 dB
Pohon – pilový pás/ Atrieb -Sägeband/ Drive – saw band:	
• Typ / Type / Type	99.001.260 (M170-PAM90-20/1-FP-i20-B14) 3x230/400V
Výkon / Leistung / Output	1,5 kW
Pohon podavač/ Atrieb -Vorschub/ Drive – feeder:	
• Typ / Type / Type	91.001.009 (MDEMA BI071-32C1C + inkr. sens.) 230/400V
• Výkon / Leistung / Output	0,37 kW
Chladící zařízení / Kühlmiteleinrichtung / Cooling equipment:	
• Typ / Type / Type	91.020.035 PA70/150 + filter PA
• Obsah nádrže / Volumen vom Kühlmittel / Capacity	15 dm3
Rozměr pásu / Sägebanddimension / Band size:	
2910×25 (27)×0,90 mm	
Řezná rychlost / Schnittgeschwindigkeit / Cutting speed:	
20-120 m/min	
Jeden zdvih podavavače/ Vorschublänge Einfachhub / One Upstroak of the feeder:	
0° - 30°……490 mm **30°- 45°……..short travel** **≥.45°……the feeder is blocked**	
Nejmenší zbytek pro podání podavačem/ The smallest residue piece for feeding with feeder / Kleinstes Reststück für Zufuhr mit dem Vorschubspannstock **Viz Poznámka 1 / Siehe Bemerkung No.1/ See Note No.1**	
0° - 30°……145 mm **30°- 45°……..145 mm -295 mm** **≥.45°……the feeder is blocked**	

Řezné rozsahy / Schnittbereiche / Cutting size:

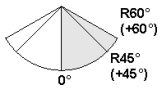			
0°	Ø258	320x258	258x258
R 45° (+45°)	Ø225	230x220	258x258
R 60° (+60°)	Ø120	130x110	110x110

Caution!

It is possible to cut angles to +45° in the automatic mode, angles bigger than +45 can be cut only in the manual mode – without usint of the feeder.

For angles bigger than + 30 °, the feed of the feeder is reduced and the length of the smallest residue piece is increased.

Sound pressure level:
The equivalent sound pressure level A (noise) at the operator's site is LAeqv = 70 dB. The values given are emission levels and may not represent safe working levels. Factors that affect the actual level of worker exposure are the characteristics of the work room, the material being processed and the saw blades used, which can significantly affect exposure

Note No.1

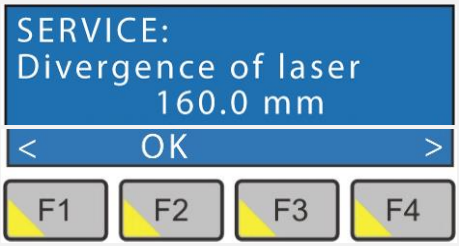

- The value has influence on the smallest residual piece for using of the feeder.
- The entered value has direct influence on the material lenght clamped in the feeder vice and direct influence on safety of the machine operation.

  If the clamped lenght is too short there is a risk of releasing of the material from the feeder vice and there is danger of injury ort he machine damage!

  Do not change the value set by manufacturer without considering of all risks!

2.2. Rozměrové schéma / Aufstellzeichnung / Installation diagram

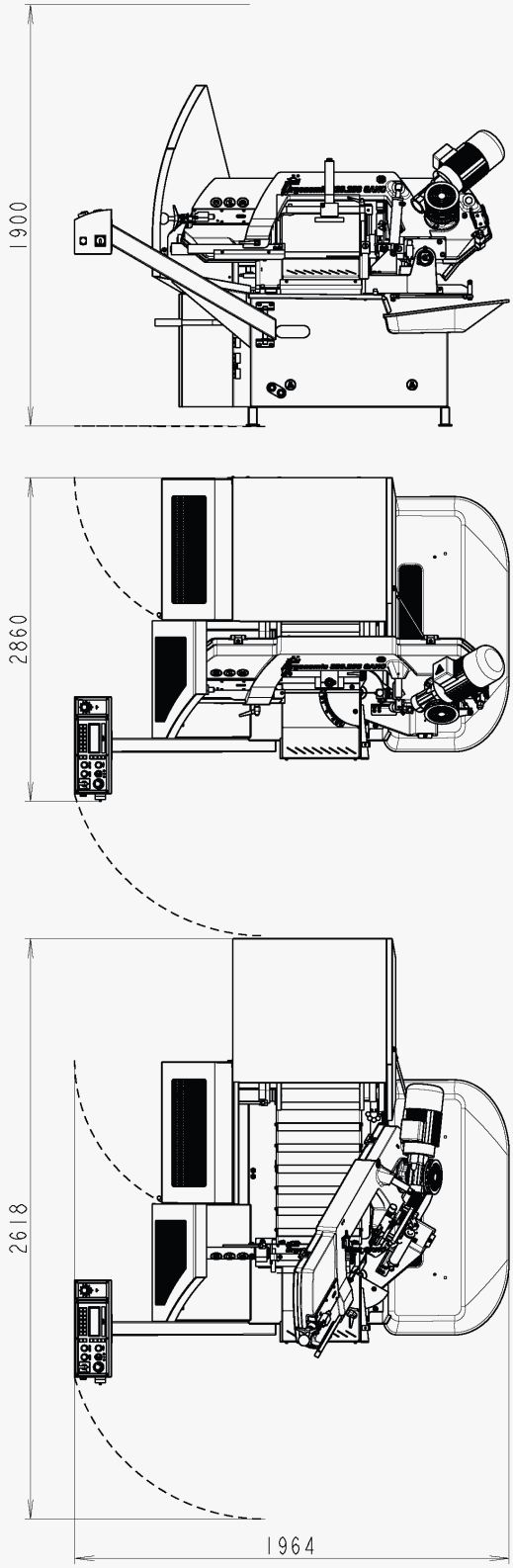

2.3. Popis / Beschreibung / Description

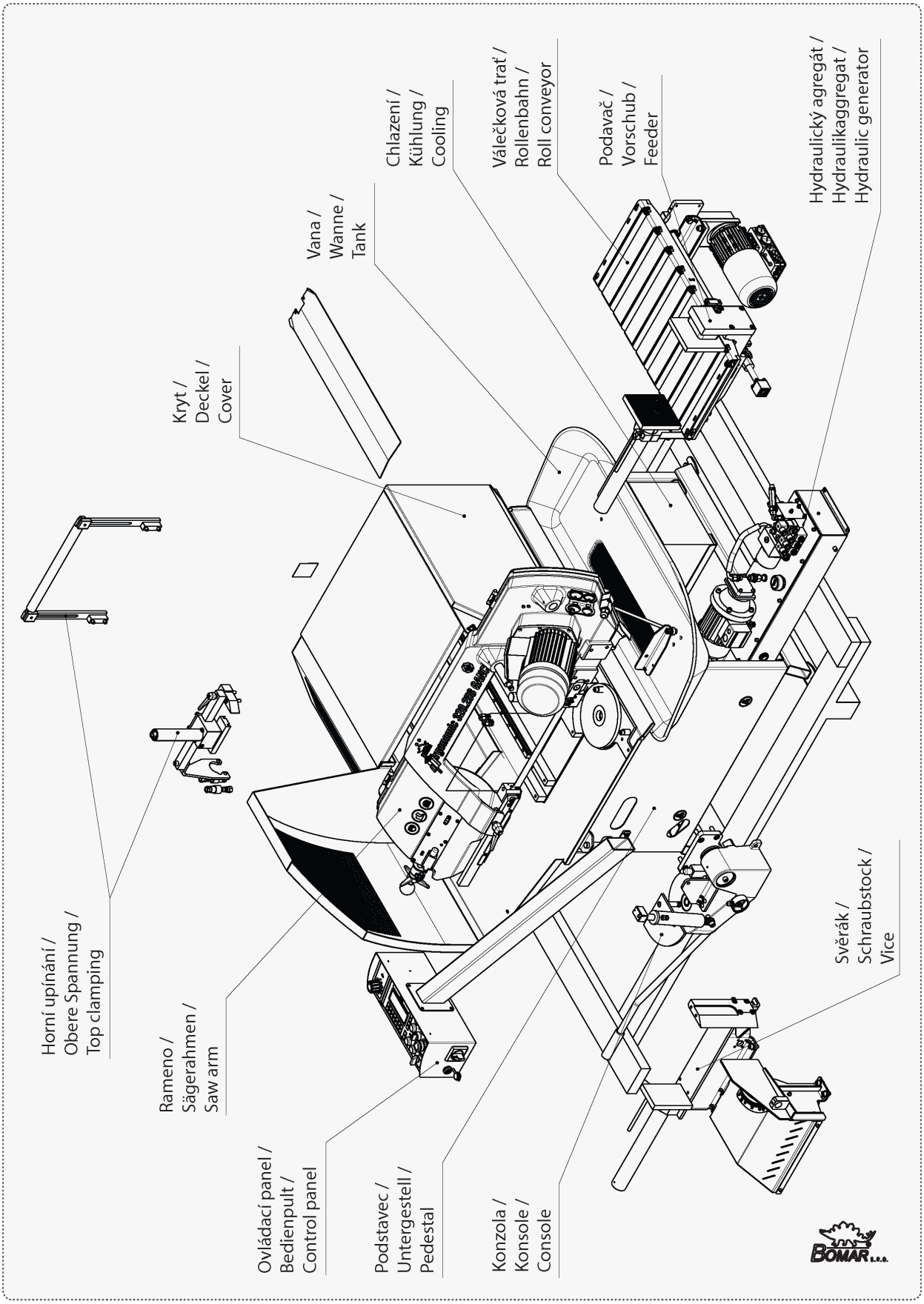

2.4. Transportation and stocking

2.4.1. Conditions for transportation and stocking

Follow the recommendations of the manufacturer for transportation and stocking! If the recommendations are not kept, damage may occur to the machine.

- Don't use a forklift truck for handling the machine, if you do not have a license for it!
- Don't move under suspended loads! Fault in the lifting device may cause serious injury.
- Keep a safe distance from the machine during transport.
- Temperature of the air must be between **-25°C and 55°C**, for a *short period* (max. 24 hours) up to *70°C*.
- Do not expose the machine to radiation (microwave radiation, ultraviolet radiation, laser radiation, x-ray radiation). Radiation can cause problems with the machine function and deteriorating of the condition of the insulation.
- Take measures, to prevent damage by dampness, by vibrations and by shakes.

2.4.2. Transport and stocking preparations

Close the vice and thoroughly oil all smooth surfaces.

Lower the saw frame to the lowest position.

Make sure to empty the machine of all traces of the cooling agent.

Fasten all loose parts securely to the machine.

Pack and wrap the control desk securely to avoid damage during transport.

The machine has to be screwed to a pallet for the transportation. Make sure the pallet is strong enough to be able to hold the saw!

2.4.3. Transport

The machine must be secured during transportationy aby se nemohl převrátit, nebo z přepravního prostředku spadnout.

If possible, attach the pallet to the floor of the truck or trailer.

Be careful that the machine is not damaged during transportation.

It is forbidden to handle the machine in any way different from that written in these operating instructions, the machine can be damaged.

Place the forks of a fork lift truck according to these marks!

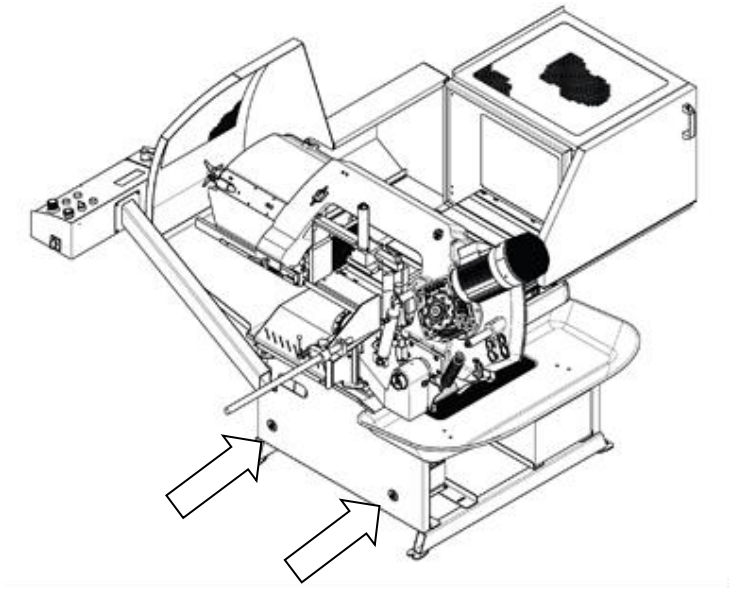

2.4.4. Stocking

Store the machine only under conditions mentioned in the manual, to avoid damage of the machine.

2.5. Activation

2.5.1. Machine working conditions

Keep the conditions of the manufacturer for machine operation! If the recommendations are not kept, damage can occur to the machine.

The manufacturer warrants the correct function of the machine for these conditions:

- At air temperature from ***10°C to 40°C***; the temperature average during 24 hours must ***not exceed over 35°C***.
- At relative dampness of the air in the interval from 30% to 95% (not condensing). Altitude up to 1000 meters.
- Do not expose the machine to any radiation (microwave radiation, ultra-violet radiation, laser radiation, x-ray radiation). Radiation can cause problems with the machine function and deteriorate the condition of the insulation.

2.5.2. Band saw unpacking and assembling

1. Remove the wrapping from the machine and unpack all parts.

> ***Attention!***
> *Switch off the main switch and lock it in position, before you start the assembly! Otherwise, there is a possibility of an accidental machine start.*

2. Now put all enclosed parts to place.

2.5.3. Installation of the length stop for the material length setting

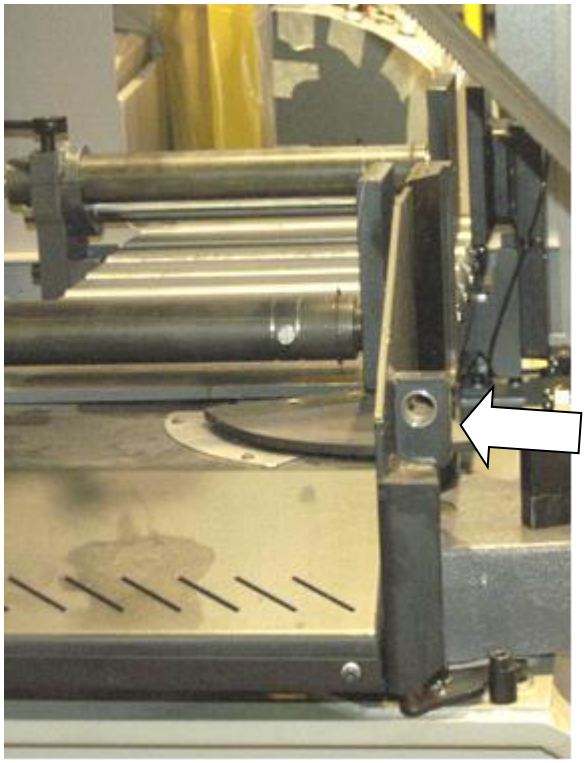

1. Slide the length stop into the hole on the side of the vice.

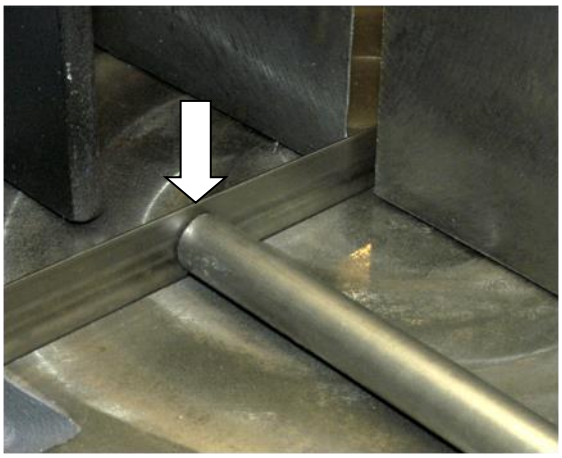

2. Move the length stop up to the material.

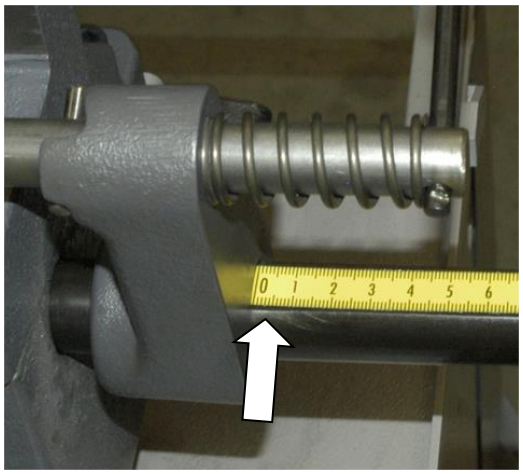

3. Set the measuring unit to zero value.

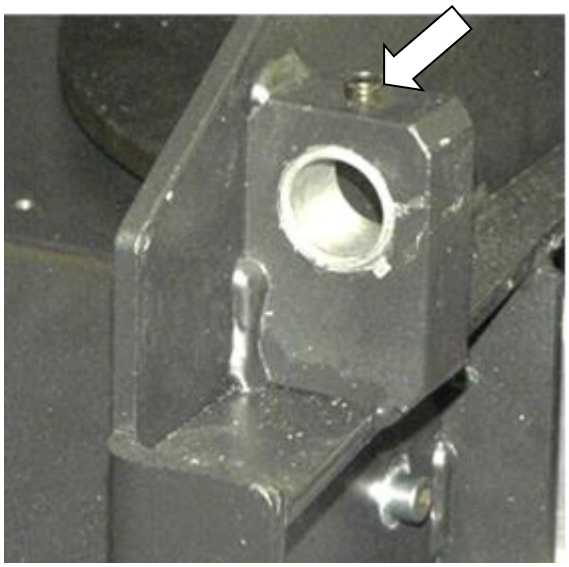

4. Fix the guiding pole of the length stop in place with a screw, which is put into the opening on the side of the vice.

2.5.4. Attachment of the cooling liquid tub

Caution!

It is forbidden to operate the machine if the tank for draining of coolant is not installed!

if the tank for draining of coolant is not installed, there is a risk of leakage of coolant to the surroundings of the machine and and the breakdown of the coolant into the electrical installation of the machine.

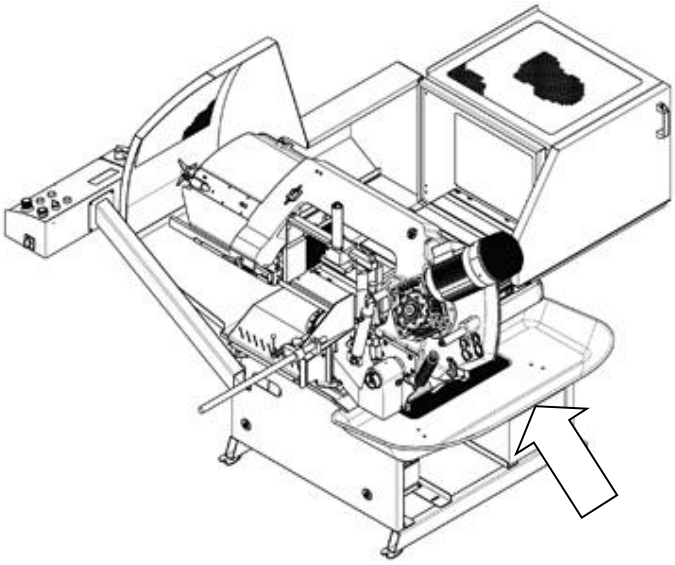

1. Put the tub for the dripping off of the coolant on the pedestal from the side of the saw.

2. Attach the hose for the coolant removal to the outlet of the tub and put its other and immerse its other end into the coolant tank.

2.5.5. Kotevní plán / Verankerungsplan / Grounding plan

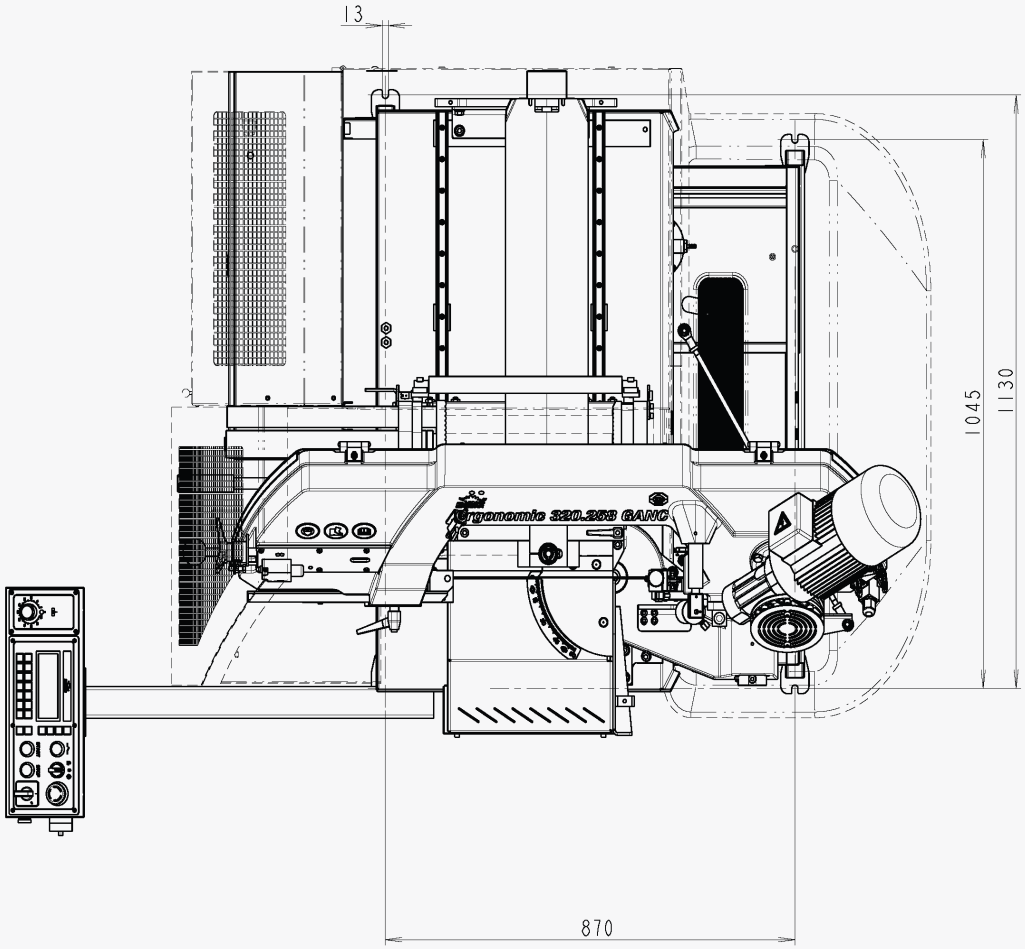

Kotvící materiál / Verankerungsmaterial / Grouding material

- 4× Hmoždina / Dübel / Plug – ø12 mm
- Vrtáno do hloubky / In die Tiefe gebohrt / Drilled to – 140 mm
- Šrouby / Schraube / Screws – M12

Šrouby podložit deskami o min. rozměrech P10×100-100
- Die Schrauben mit Platten mit Minimaldimensionen P10×100-100 unterlegen
  Screew must be bottomed with plates (min. dimensions P10×100-100)

Požadavky na rovinnost podlahy / Anforderungen an die Bodenebenheit / Requirements for floor flatness

± 10 mm / 1 m

2.5.6. Machine installing and leveling

Check the floor supporting capacity before installing the machine. If the floor capacity does not meet the requirements, you must ready the necessary base for the machine.

Minimal requirement:

machine weight – Ergonomic 320.258 GANC – 700 kg

+ weight of the accessories

+ maximum weight of material

- The machine must be leveled in a horizontal position. All feet of the machine must touch the floor after leveling.
- The machine must be leveled by means of a calibrated spirit level. Put the spirit level near the vice. Adjust the roller conveyors according to the spirit level.
- For machine leveling, take care that there is sufficient space available for operation, repair work, servicing of the machine and handling of the material.
- The machine and all appended parts and accessories must be visible from the place of operation.

2.5.7. Electrical connection

Attention!
Only a qualified professional must carry out the servicing and repairs of the electric equipment! *Take special care during work with the electrical equipment. High voltage accident can have fatal consequences! Always follow instructions for work safety.*

Electrical parameters of the machine:

- Service voltage: ~ 3×400 V, 50 Hz, TN-C-S
- Total input : 2,5 kW
- Max. fuse: 10 A

Before connecting the machine turn off the main power switch and ensure a dry area for the connection work.

Note:
The values of the cross section of the conductor and the rated current can be found in the regulations.

Service voltage must agree with the line voltage! Cross section of the supply line must respond with the rated current for max. machine load.

Note:
The socket with the fork can be used only for machines with the rated current less than 16 A and total input less than 3 kVA.

The input line is equipped with a 16 A socket for connection of the machine to the electric supply line. In case the machine is connected with a direct connection, an extra main switch which can be locked in zero position must be added.

Attention!
In this case the extra switch becomes the primary switch and the main switch on the machine has only secondary function!

2.5.8. Check the direction of the saw band

After the machine has been successfully connected, switch on the machine and run the driving engine of the band briefly. The movement of the band must be in agreement with the direction of the arrow on the saw band cover. If the direction of the saw band does not agree, the phases at the terminal line must be switched.

2.5.9. Filling of the cooling system

Prepare a mixture of the water and the cooling liquid. Keep to the concentration specified by manufacturer. Remove the cover from the drainage hole. Pour the mixture into the tank of the cooling system.

When filling the tank with the cooling liquid, take care that the liquid does not drip out of the tank and that the tank does not overflow.

During operation, the liquid flows through the strainer outlet into the tank. Keep the strainer strainer open

2.6. Machine functions check

Before you start the check study the chapter *Machine control* thoroughly. Do not proceed with the check if you did not fully understand all control elements and machine functions.

Check, if the machine or some parts of the machine were not damaged during transport.

Check, if all covers are installed and functional. Check (with the Tenzomat) if the saw band is correctly stretched. If it is necessary, you can stretch the saw band according to chapter *Selection and replacement of the saw band*. Correct values of the saw band tension are on the Tenzomat.

Switch on the main switch and check the motors and systems (saw band drive, hydraulic pump, cooling pump, chips conveyor).

Open and close the main vice. Turn the saw frame of the band saw from one outer position to the other outer position. Raise the saw frame to the top position and than lower the saw frame to the lowest position.

Carry one cycle of cutting without material. Check, if the machine runs with no irregularities. If all machine functions are run properly, the machine is ready for operation.

2.7. Machine disposal after lifetime

Pour all service fluids (cooling liquid, hydraulic oil) from the machine over into designated reservoirs. Dismantle machine into separate parts and dispose of them in accordance with valid directives.

Packaging material Also dispose in accordance with valid directives.

Packaging and machine parts that contain secondary raw materials can be recycled.

2.8. Saw band

Remove the saw band cover only after you have installed and tightened the saw band a bit. This way you minimize the risk of injury.

2.8.1. Saw band size

2910×25 (27)×0,90 mm

2.8.2. Selection of the saw band tooth system

The manufacturers provide the saw bands with constant and variable tooth systems. The important factor for selection of the tooth system is the length of the cutting canal with respect to the size of the product.

- *Constant tooth system* – the saw band has a constant tooth pitch all over its length. This type is suitable for cutting solid materials.
- Variable tooth system – tooth pitch is variable. Variable tooth system is used for profiled materials and bundle cutting. Variable tooth pitch lowers vibration of the saw band, increases service life of the saw band and quality of the cut area.

BOMAR recommends variable tooth system for its band saws.

In the table below the type of the tooth system depending on the sizes and profile of the cutting material is advised.

Footnotes:

Z_pZ – teeth number on one inch

S – tooth with zero angle of the teeth

K – tooth with positive angle of the teeth

Examples of the tooth system marking:

32 S – number „32" means 32 teeth per inch (constant tooth system), letter „S" marks teeth with zero angle with respect to the band.

4–6 K – number „4–6" means 4 to 6 teeth per inch (variable tooth system); letter „K" marks teeth with positive angle with respect to the band.

2.8.3. Saw band running-in

For reaching a full lifespan of the band we recommend performing a running-in.

Running-in: Perform a cut with the frame lowering speed at 50%. If vibrations occur increase or decrease the band's speed. When cutting **large pieces** run the band for approximately 15 minutes.

When the band has been run, increase the lowering speed of the arm to normal. The running in of the saw band avoids micro chips on the cutting edges of a new saw band ensuing from first excessive stress. This would decrease its lifespan substantially.

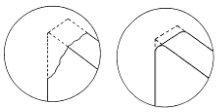

The optimal running in of the saw band produces ideal rounded cutting edges and therefore the conditions for a maximum lifespan are met.

Note:
Run-in reground saw bands too.

2.8.4. Table for teeth selection

SHAPED MATERIAL (D_p, S = mm)

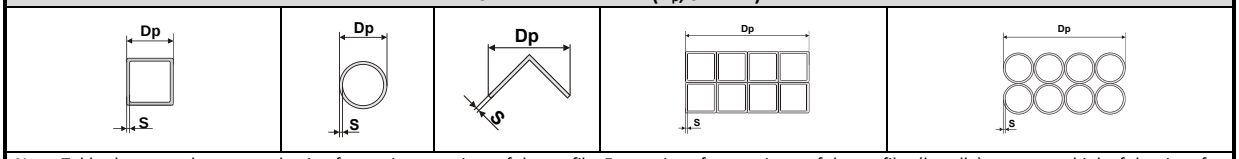

Note: Table shows tooth system selection for cutting one piece of the profile. For cutting of more pieces of the profiles (bundle), you must think of the size of the wall as double size of the wall of one profile (that means, size „S“ equates to 2×S). In table, there are tooth systems constant and variable.

Size of the wall S [mm]	Tooth system (Z_pZ) Outer diameter of the profile D_p [mm]					
	20	40	60	80	100	120
2	32 S	24 S	18 S	18 S	14 S	14 S
3	24 S	18 S	14 S	14 S	10–14 S	10–14 S
4	24 S	14 S	10–14 S	10–14 S	8–12 S	8–12 S
5	18 S	10–14 S	10–14 S	8–12 S	6–10 S	6–10 S
6	18 S	10–14 S	8–12 S	8–12 S	6–10 S	6–10 S
8	14 S	8–12 S	6–10 S	6–10 S	5–8 S	5–8 S
10	-	6–10 S	6–10 S	5–8 S	5–8 S	5–8 S
12	-	6–10 S	5–8 S	5–8 S	4–6 K	4–6 K
15	-	5–8 S	5–8 S	4–6 K	4–6 K	4–6 K
20	-	-	4–6 K	4–6 K	4–6 K	3–4 K
30	-	-	-	3–4 K	3–4 K	3–4 K
50	-	-	-	-	-	3–4 K

Size of the wall S [mm]	Tooth system (Z_pZ) Outer diameter of the profile D_p [mm]					
	150	200	300	500	750	1000
2	10–14 S	10–14 S	8–12 S	6–10 S	5–8 S	5–8 S
3	8–12 S	8–12 S	6–10 S	5–8 S	4–6 K	4–6 K
4	6–10 S	6–10 S	5–8 S	4–6 K	4–6 K	4–6 K
5	6–10 S	5–8 S	4–6 K	4–6 K	4–6 K	3–4 K
6	5–8 S	5–8 S	4–6 K	4–6 K	3–4 K	3–4 K
8	5–8 S	4–6 K	4–6 K	3–4 K	3–4 K	3–4 K
10	4–6 K	4–6 K	4–6 K	3–4 K	3–4 K	2–3 K
12	4–6 K	4–6 K	3–4 K	3–4 K	2–3 K	2–3 K
15	4–6 K	3–4 K	3–4 K	2–3 K	2–3 K	2–3 K
20	3–4 K	3–4 K	2–3 K	2–3 K	2–3 K	2–3 K
30	3–4 K	2–3 K	2–3 K	2–3 K	1,4–2 K	1,4–2 K
50	2–3 K	2–3 K	2–3 K	1,4–2 K	1,4–2 K	1,4–2 K
75	-	2–3 K	1,4–2 K	1,4–2 K	1,4–2 K	0,75–1,25 K
100	-	-	1,4–2 K	0,75–1,25 K	0,75–1,25 K	0,75–1,25 K
150	-	-	-	0,75–1,25 K	0,75–1,25 K	0,75–1,25 K
200	-	-	-	0,75–1,25 K	0,75–1,25 K	0,75–1,25 K

SOLID MATERIAL (D = mm)

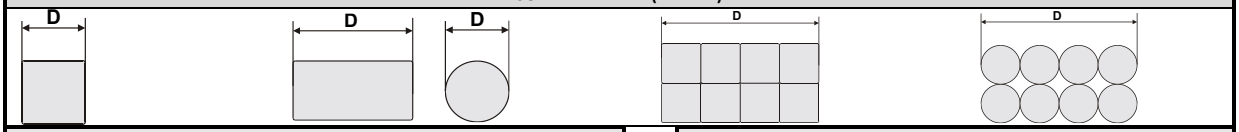

Constant tooth system		Variable tooth system	
length of the cut D	tooth system (Z_pZ)	length of the cut D	tooth system (Z_pZ)
to 3 mm	32	to 30 mm	10 –14
to 6 mm	24	20–50 mm	8–12
to 10 mm	18	25–60 mm	6–10
to 15 mm	14	35–80 mm	5–8
15–30 mm	10	50–100 mm	4–6
30–50 mm	8	70–120 mm	4–5
50–80 mm	6	80–150 mm	3–4
80–120 mm	4	120–350 mm	2–3
120–200 mm	3	250–600 mm	1,4–2
200–400 mm	2	500–3000 mm	0,75–1,25
300–800 mm	1,25		
700–3000 mm	0,75		

Přes výše uvedené návrhy berte v úvahu doporučení .....

3. Ovládání stroje / Machine control / Bedienung der Maschine

3.1. Starting the band saw

»

1. Switch on the main switch of the band saw. The main switch is placed on the switchboard side.

After switch-on, the system is initialized and initialization screens appear.

2. When prompt appears

…activate the machine safety circuit with the button on the machine control panel.

Unless the safety circuit is activated, the machine cannot be started.

If the safety circuit cannot be activated with the button on the machine control panel, check all safety elements.

3. After the safety circuit is activated, the first screen of the selected mode appears according to the mode selected (see the mode selector position).

4. Reference the machine – see the chapter on the machine referencing

3.2. Control panel - description

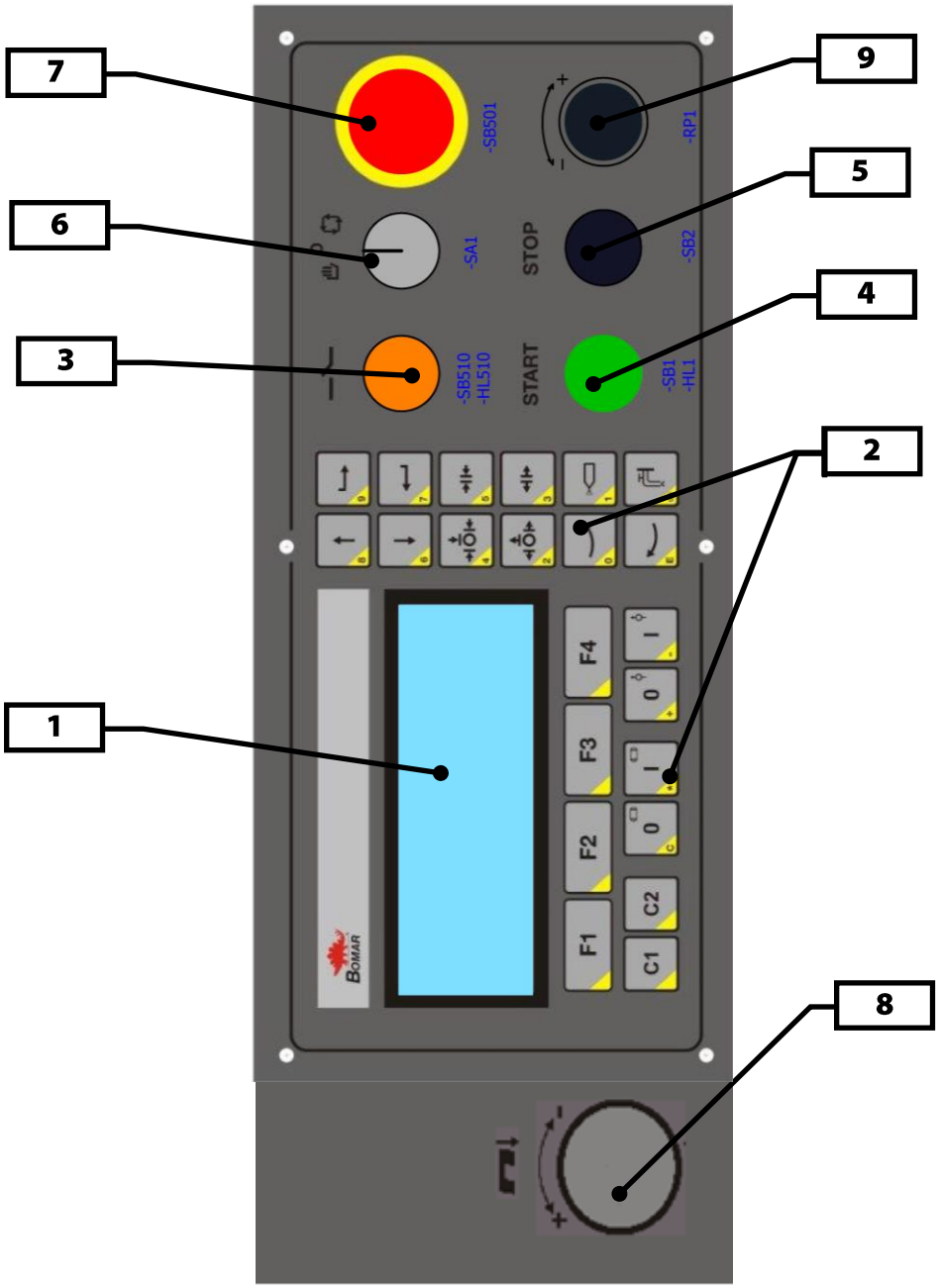

1	**LCD** LCD displays status information and menu. **F1 – F4** – function keys to confirm information shown on the screen If the text shown refers to a key, the given information can be confirmed by pushing the indicated key.
2	**Control keys / numeric keypad.**
	**Without function**
	**Turn on / off saw blade** Button with symbol „I“ turns on saw blade drive, button with symbol „0“ turns off saw blade.
	**Turn on /off hydraulic circuit** Button with symbol „I“ turns on hydraulic circuit, button with symbol „0“ turns off hydraulic circuit. The hydraulic circuit is controlled automatically when you run a semi-automatic / automatic cycle on / off .
	**Shoulder movement** Pressing and holding the buttons raises or lowers the boom with the lift hydraulic cylinder. When the arm is raised using the button, the arm can be lifted over the entire lift cylinder range.
	**Open/Clamp feeder vice** Pressing and holding button open or clamp feeder vice in manual mode. At the same time, the vice thrust (optional accessory) is enabled/disabled. ***Warning:*** Feeder vice must be clamped always before main vice is clamped.
	**Without function**
	**Feeder movement** In manual mode, pressing and holding the button will allow the feed vice to move. If the **STOP** button is pushed and held simultaneously with the button for movement of the saw feeder, the **MICROFEED** in the given direction is activated.
	**Open/Clamp main vice** Pressing and holding button open or clamp full stroke vice in manual mode. At the same time, the vice thrust (optional accessory) is enabled/disabled. ***Warning:*** Feeder vice must be clamped always before main vice is clamped.
	**Cooling system selection** Top – Cooling with Microniser (optional accessories) Bottom - Machine rinsing, cooling pump running even when belt drive is off

3	**Safety circuit** Switch on the safety circuit by pressing button.
4	**START cycle** After pressing the button will start the cutting cycle.
5	**STOP button** After the button is pushed, the cutting cycle is interrupted or switched off.
6	**Selecting a mode machines** **0** for settings and service for manual mode for automatic mode **Manual mode** In the manual mode, it is possible to: - manually (by pushing buttons) control the individual machine functions - start the semi-automatic cycle by pushing the START button (4); the semi-automatic cycle can be interrupted/ended with the STOP button (6). **Automatic mode** After the mode is started, fully automatic mode is running according to the preset program. **Main menu of the machine** Enabling entry in menus in which the service and user setting parameters can be changed**.**
7	**Emergency Stop Switch** In the case of health or operational safety risk, push the Emergency stop Switch button – all dangerous movements of the machine are IMMEDIATELY stopped.
8	**Regulation of the rate of descent of the arm to the cut** By turning the valve, the boom descent speed can be continuously adjusted (the final working speed in the section is further influenced by the ADFR setting - pressure control in the section). **Warning!** If the throttle valve is tightened too tightly when closing, the valve seat may squeeze, causing leakage. Therefore, always tighten the valve lightly
9	**Frequency converter – setting of the cutting speed** Serves to set the speed of the saw band during cutting with the possibility of the frequency converter

10	**USB port (optional accessory)** Can be used for load/save cutting data.
11	**Main switch**

3.3. Machine referring

Before the saw is used, the machine must be referenced.

Referencing means setting initial positions of some mobile units of the machine before its further use.

If the machine is not referenced:

- the SERVICE and ADJUST parameters can be changed

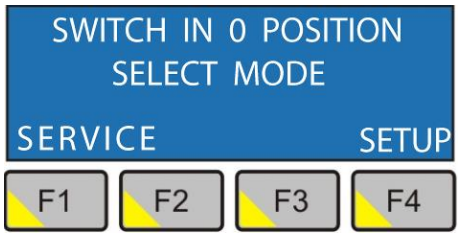

- only limited machine movements can be controlled in the manual mode

  The display, however, still shows the message <REF>, which warns that the machine has not been referenced.

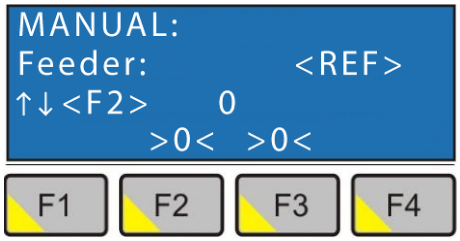

- The machine cannot be controlled in the automatic mode.

Machine referencing procedure

1. Remove all objects lying in the track of the machine referencing units.

> ***Attention!***
> ***Before starting the referencing, remove all material from the saw and feeder. Do not reference the machine with material clamped in one of the vices! There is a risk of collision!***

To release the material before referencing, the vices can be opened in the manual mode.  .

2. **Turn the saw arm to an angle lesss than 45 °.**

   The feeder is blocked and it is not possible to start referencing of the machine.

3. Turn the switch to the automatic mode.  .

   Information appears that the machine is not referenced.

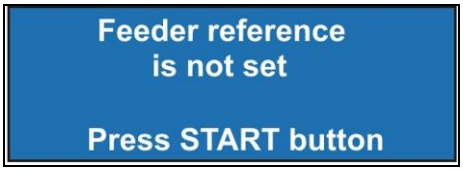

4. **To start referencing, push the START button.**

   The display shows information on referencing in progress.

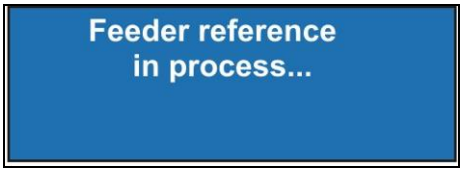

The **sequence of reference movements** is executed.

- arm positioning to the maximum cylinder stroke (the arm referencing is equipped with a height measurement sensor)
- clamping/releasing of the feeder vice
- clamping/releasing of the main vice
- forward feeder travel
- main vice detection
- time delay – reference adjusted

5. After successful referencing, the display shows information that the **reference is completed.**

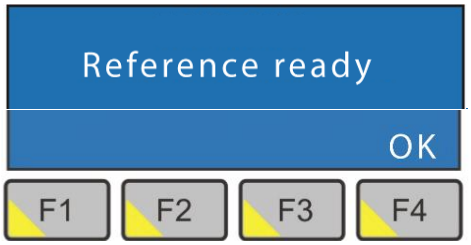

Confirm with the F4 <OK> button.

6. **The screen for starting the automatic mode** appears – the machine is ready for automatic operation.

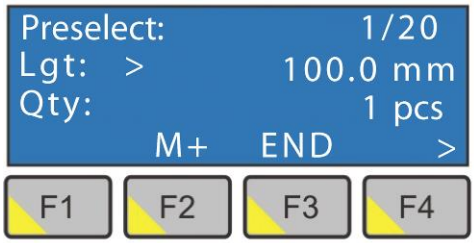

3.4. Machine control in manual mode

Caution!

It is not possible to control the feeder if a set arm angle is equal to+45° or bigger than +45°.

For angles bigger than + 30 °, the feed of the feeder is reduced and the length of the smallest residue piece is increased.

3.4.1. Meaning of symbols on the manual mode screens

The LCD shows symbols indicating the course of the individual functions as a mechanism to check function of the individual commands.

Meaning of symbols:

ϕ	hydraulic circuit symbol (right bottom corner) indicating function of the hydraulic pump
|Ξ| >|	saw band cooling symbol (right bottom corner) - water/micronizer selection - indicating function of cooling
OO	saw band drive symbol (right bottom corner) indicating function of the saw band By means of the speed control button, speed can smoothly be set within the given range; current speed of the saw band is then indicated on the display directly.
< > F3	bracket symbol **<>** above the **F3** key indicates function of the main vice If the vice is clamped, this state is indicated by the **>O<** symbol in brackets. **Note:** This output for the main vice clamping is given by the pressure switch. If the symbol does not appear after clamping, it is **NECESSARY** to adjust the pressure switch; otherwise the machine **CANNOT** be started.

< > F2	the bracket symbol <> above the **F2** key indicates function of the feeder vice. If the vice is clamped, this state is indicated by the **>O<** symbol in brackets. **Note:** This output for the main vice clamping is given by the pressure switch. If the symbol does not appear after clamping, it is **NECESSARY** to adjust the pressure switch; otherwise the machine **CANNOT** be started. **WARNING!** **Correct function / clamping function of the feeder vice must only be checked with loaded material of the minimum width of 5mm!** **If you clamp material of a lower width in the feeder vice, the clamping will be indicated by the > X < in brackets; in this case, the machine CANNOT be started.** **The signal for > X < comes from the limit switch located in the rear part of the feeder and detects empty clamping.** **In the automatic mode, material of a lower width than 5mm cannot be cut (the material is clamped with the feeder).** **In the manual and semi-automatic mode, material of a lower width than 5mm can be cut (the material is not clamped with the feeder).**
↓	symbol of the arm declining to cut indicates function of the arm movement in both directions (left bottom corner)

3.4.2. Manual machine operation in the manual mode

The manual mode is used for **simple control of the individual machine functions by means of the individual control buttons** - that is, buttons on the numeric keyboard and function keys F1-F4

1. To control the machine in the manual mode**, switch it to the manaul mode** – the mode selector to the position  .
2. The LCD shows the **main screen of the manual mode**, containing information on the feeder position and the cutting speed selected, as well as symbols indicating the course of the individual functions.

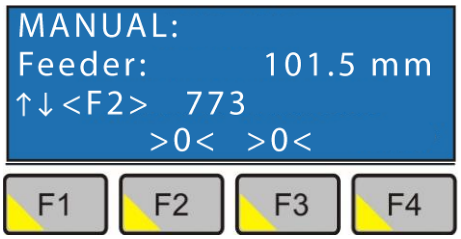

3. By pushing or holding the individual buttons on the control panel, the individual functions of the machine can be controlled.

   When the individual buttons are pushed, the LCD shows symbols of running functions, which are simultaneously used as a mechanism to check function of the individual commands.

   Meaning of symbols - see the chapter on meaning of symbols on the manual mode screens.

   Control buttons – see description of the control panel

3.4.3. Execution of semi-automatic cut in the manual mode

By means of the semi-automatic cycle, it is possible to execute automatic **sequence of one cut, without feeding the selected length.**

The required material length can only be measured manually - with a scale or stop.

The material must be loaded **manually (not by means of the feeder - risk of collisions!).**

To cut off every piece, it is always necessary to load or push material **manually** and restart the semi-automatic cycle.

NOTE:

Before starting the semi-automatic cut, it is NECESSARY to select suitable cutting conditions with regard to the required cutting quality of the piece divided.

Operation of the machine when performing a semi-automatic cut:

1. **Switch the machine to the manual mode** – mode selector to the position.

   The LCD shows a screen with information on the machine state, containing information on the feeder position, cutting speed selected, position (height) of the saw arm as well as symbols indicating the course of the individual functions.

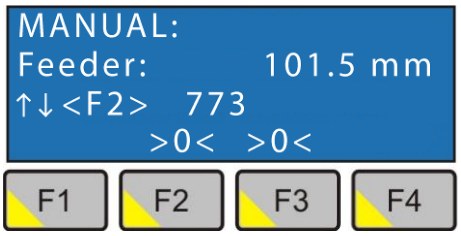

2. **If the saw band obstructs insertion of a materiál, use the buttons for manual saw arm control to move the saw arm to the height so that the material can be inserted.**

   Recommended height is min. 10 mm above the material.

3. **Manually (without the feeder) insert material to the main vice.**

> ***Attention!***
> ***During loading, the material must not be inserted into the main vice with the feeder! There is a risk of the material face colliding with the main vice!***

4. **Align the material.**

   The material can be aligned by being clamped in two vices.

5. **Manually (without the feeder) adjust the required length of the piece cut.**

6. **Push the START button.**

7. **Next steps depends on the fact whether the initial arm position before cut HAS BEEN or IS NOT set**

- **If any arm initial position before cut IS NOT set**

  a) The appeal to set the position appears after START pushing:

b) Confirm the appeal with the **F4 <OK>** button.

c) The screen with information on the machine state apeears again

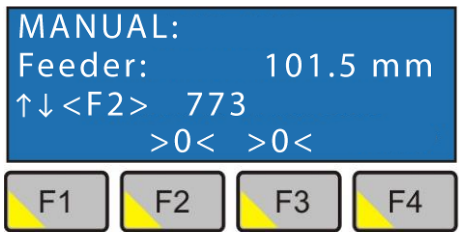

d) By means of the arm height control buttons, **set the arm initial position before cut** with regard to the material height - the recommended adjustment is approx. 10mm above the material.

Information about current arm height is shown at the screen:

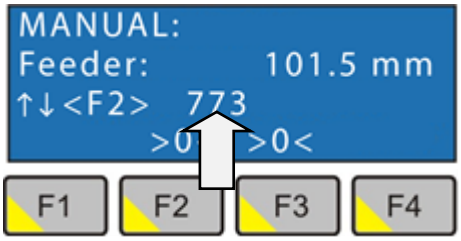

Caution! The units in which the arm position is shown are „sensor pulses" not „milimeters"!

e) Confirm the adjusted height with the F2 button.

Adjusted arm initial position (height) before cut which has been confirmed with F2 stays kept in the machine memory for next semiautomatic cuts and the arm returns to this position after each cut until the confirmed height is not deleted from the machine memory using some act from these:

- displacement of the saw arm upward or downward with some of the buttons for manual setting of the saw arm height
- switching of the mode switch to a different mode (automat, 0)
- switching out of the machine by means of the main switch
- machine refering
- interruption of electricity supply

f) **Push the START button again**, the screen appears with information on the course of semi-automatic cut

and the semi automatic cut starts up

- **<u>If the arm initial position before HAS BEEN SET</u> before start of some from previous cuts and stays kept in the machine memory:**

  The order to adjust the saw arm position (height) above the material does not appear.

  The screen with information on the course of semi-automatic cut appears right after pressing the START button for the first time (see the step No.6)

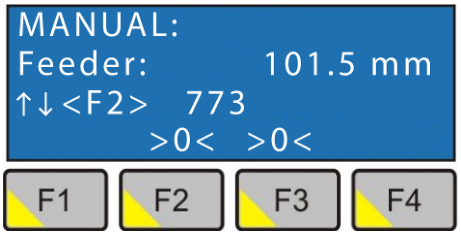

<u>and the semi-automatic cut starts up</u>.

8. **<u>Semi-automatic cut</u>**

   When the screen with information on the course of semi-automatic cut appears:

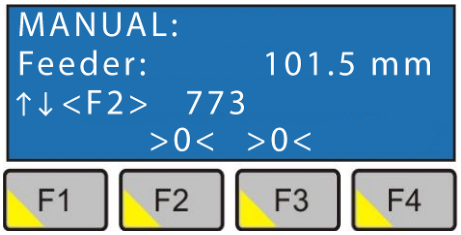

   a) Main vice is clamped.

   b) The arm sinks into the cut and the saw band divides the material

   c) After the lower position of the arm is achieved (cut finished), the arm returns to the initial upper position from which the cut started.

      The saw band drive stops in the lower or upper arm position - according to the "ADJUST" menu settings.

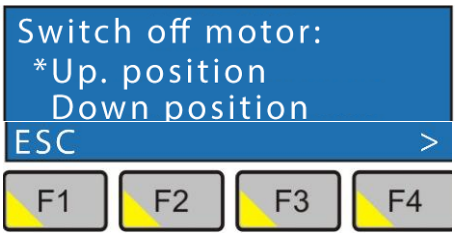

      For safety reasons, the vice remains clamped (holding the material).

d) When the arm returns to the initial position, the semi-automatic cut sequence is completed.

The opening screen reappears.

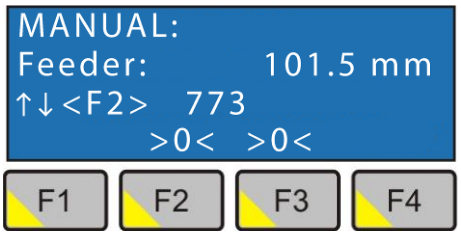

9. **Remove the cut-off piece**

10. With the vice release button, open the main vice and manually **remove the remaining piece.**

11. To cut another piece, repeat the entire process.

3.4.4. Interruption of semi-automatic cut:

» • **Emergency Stop Switch (TOTAL STOP)**

In the case of emergency, push the **Emergency Stop Switch**.

After you push the **Emergency stop switch**, all dangerous movements of the machine are stopped immediately.

For safety reasons, the vice remains clamped (holding the material).

The screen appears:

Repeated putting into operation

1. Turn the **Emergency stop switch** in the direction of the arrow (on the button).
2. A prompt appears to confirm the error message:

3. Confirm the error message by pushing the F4 (=OK) button.
4. When prompt appears

5. Activate the machine safety circuit with the button on the machine control panel.

6. Lift the saw arm upwards over the material and push the **START** button.

3.5. Machine control in automatic mode

Caution!

It is possible to cut angles to +45° in the automatic mode, angles bigger than +45° or equal to+45° can be cut only in the manual mode – without usint of the feeder.

For angles bigger than + 30 °, the feed of the feeder is reduced and the length of the smallest residue piece is increased.

3.5.1. Automatic cycle

In the automatic mode, the material can automatically be divided into the given number of pieces of specified lengths.

The machine software enables entry of **20 programs**; in every program, it is possible to enter one material length and the number of pieces to be cut to this length entered.

In a single automatic cycle, therefore, material can be cut to up to 20 different lengths; an arbitrary number of pieces can be chosen for every length.

The automatic cycle can be started from any program. After cutting the first selected program, the automatic cycle will gradually continue with all successive non-zero programs .A zero program (zero lengtth and zero number of pieces) ends the cycle.

The machine is able to feed material of any length. If the length fed is higher than **600mm (maximum length of a single feed)** the machine automatically executes more feeds.

Machine operation for automatic cycle::

1. If the machine is not referenced, **perform its referencing** (see the chapter on the machine referencing).
2. **Manually (without the feeder!), insert material into the main vice.**

> ***Attention!***
> ***During the automatic cycle, the material must PERMANENTLY be supported along its entire length!***
> ***There is a risk of the unsupported material getting stuck in the feeder track and damage to the machine.***

3. **Align the material.**

   The material can be aligned by being clamped in two vices.

4. **Switch the machine to the automatic mode** – mode selector to the position  .
5. The LCD shows menu for the **cycle programming.**

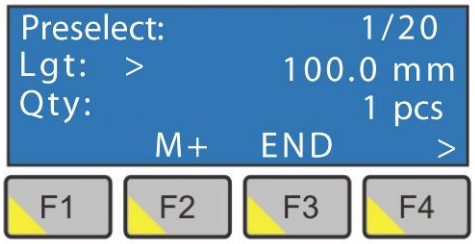

Name	Description
Preselection	**Number of the currently loaded program / total number of programs** Up to 20 programs can be loaded to the system.
Length	**Cut piece length** In the currently loaded program, enter the required length of the pieces cut.
Number	**Number of pieces cut for the entered length** In the currently loaded program, enter the number of pieces of the required length**.**
	**Active line designation** Parameters in the active line can be changed. Enter numbers by means of the numerical keyboard installed on the control buttons.

By means of the F1, F2, F3, F4 buttons and the numerical keyboard, you can preset the individual programs in this screen:

Name	Description
F1, F4	**Browsing through the individual programs** **F4 – browse forward** **F1 – browse backward** NOTE: If a parameter in the browsed-up program (length, number of pieces) is equal to zero, it is impossible to browse further from this program.
F2	**Data saving** By pushing F2, you can save current values of all programs in the system. **(F2=M…Memory)**
F3	**End of programming and selection of a program to start the automatic cycle** **(F3=End)** Browse up the screen with the program from which the automatic cycle should start and push F3. NOTE: If a parameter (length, number of pieces) in the program selected is equal to zero, the automatic cycle cannot start from this program.

Programming procedure:

a) With the **F1** and **F4** buttons, **browse up the program** (program number) from which you want to start programming the automatic cycle.

Parameters of the browsed-up program appear on the screen with menu for the cycle programming.

b) On the screen with the selected program parameters, **enter:**

- **required length** (common for all pieces cut continually and successively according to this program)
- **required number of pieces** (the selected number of pieces will be cut continually and successively; all pieces will be of the specified length)

Enter numbers by means of the numerical keyboard installed on the control buttons.

Movement between the individual specified parameters of the displayed program is possible by means of key E.  .

Deletion of entered values – key C 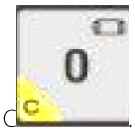 .

c) With the F1 or F4 button, switch to another program you want to view or modify and check or program its parameters.

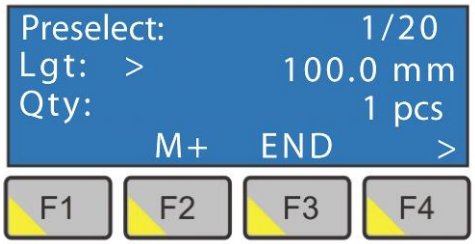

d) If you want to save the entered parameters in the machine memory, after completing modification of the given parameters, **push the F2 button.**

A screen for confirmation of the change appears.

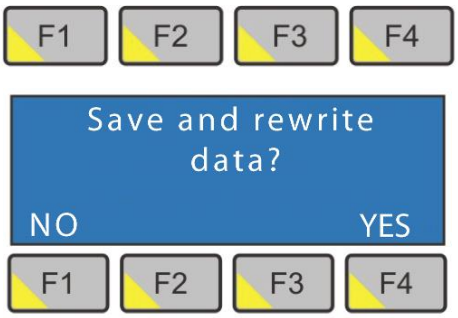

F1 – NO – changes will not be saved

F4 – YES – changes will be saved

The changes which are not saved will be deleted from the machine memory when the machine is switched off with the main switch or if the electric power supply is interrupted.

e) **Browse up the program from which the automatic cycle should start.**

After the automatic cycle starts, pieces are first cut up according to this initial program selected. The cycle will continue with other immediately successive non-zero programs. **The cycle will end with a zero program.**

f) **To finish programming and move to another screen, push the F3 button.**

6. <u>After you push the F3 button in the previous step, a screen</u> **<u>appears with options for material cut-in:</u>**

- **<u>If the operator does not want to execute cut-in of the material:</u>**

  a) **<u>Push the F4 button – option to start the cycle without material cut-in</u>**

  b) If the initial arm position over the material has not been entered, after you push the F4 button, **a prompt appears to set the initial arm position over the material.**

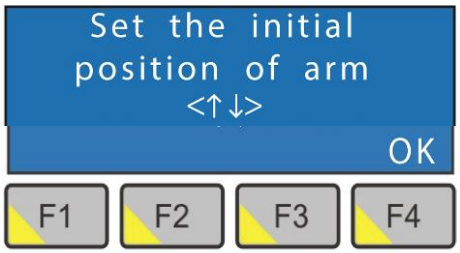

When the prompt is displayed folow these steps:

- By means of the arm height control buttons, **set the arm initial position before cut** with regard to the material height - the recommended adjustment is approx. 10mm above the material.
- Confirm the adjusted height with the **F4 <OK>** button.

After each cut, the arm returns to this height.

c) After you confirm the preset initial arm position, a screen reappears with the menu for the material cut-in.

d) Pushing the **F4** button will **start up the automatic cycle** from the first selected program.

- **<u>If the operator wants to execute cut-in of the material:</u>**

a) **<u>Push the start button – option to start the cycle without material cut-in</u>**

b) If the initial arm position over the material has not been set, after you push the F4 button, **a prompt appears to set the initial arm position over the material.**

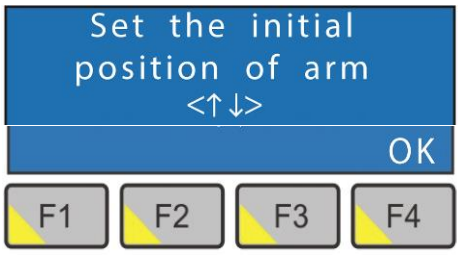

When the prompt is displayed folow these steps:

- By means of the arm height control buttons, **set the arm initial position before cut** with regard to the material height - the recommended adjustment is approx. 10mm above the material.
- Confirm the adjusted height with the **F4 <OK>** button.

After each cut, the arm returns to this height.

c) After you confirm the preset initial arm position, a screen reappears with the menu for the material cut-in

d) Pushing the **START** button **starts up cut-in** at the manually set length.

The screen shows information on the course of cut-in.

e) The operator is informed of the **cut-in finish** on the screen:

f) After the **F4 <OK>** button is pushed on the screen with cut-in finish information, the **screen appears for starting the automatic cycle**.

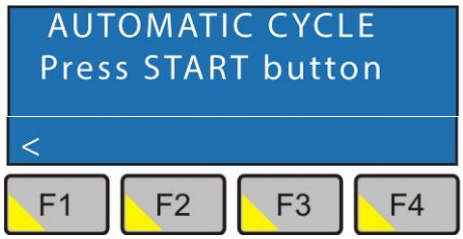

F1 - return to previous screen

g) Pushing thea **START** button **starts up the automatic cycle**

7. <u>After the **automatic cycle is started**, a screen appears with the course of the automatic cycle.</u>

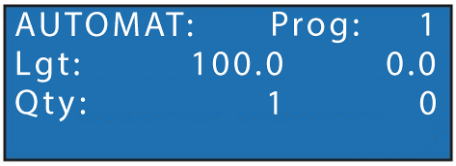

Name	Description
AUTOMAT	**Information on the current machine mode**
Prog:	**Number of the program in progress**
Length	**Cut piece length** Lgt: 520.0 0 Length entered in the program in progress — Currently cut length
Qty.	**Number of cut pieces of the specified length** Qty: 20 0 Number of pieces entered in the program in progress — Currently cut-up number of pieces

After end of every cut and complete end of the automatic cycle

- the arm moves up to the initial position from which the automatic cycle started

- the saw band drive stops at the lower or upper arm position – according to the option in the "ADJUST" menu

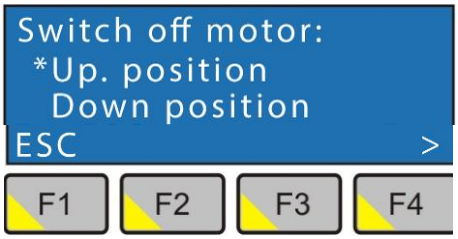

- for safety reasons, the main vice remains clamped (holding the material)

After cutting off the material, always:

- **remove the last cut-off piece from the machine manually**
- **open the main vice** with the button for releasing the main vice (in the manual mode) and remove the remaining piece manually.

(For details, see Automatic cycle interruption – material depleted)

8. **End of the automatic cycle** is announced on the screen:

9. Pushing the F1 button on the screen announcing end of the automatic cycle enables **return to the screen for programming the automatic cycle.**

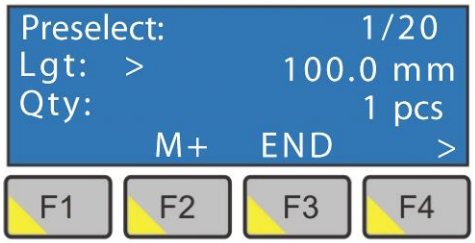

On this screen, you can either modify programs to start another automatic cycle or you can initiate another automatic cycle with the same entry.

3.5.2. Interruption of automatic cut

»

- **STOP button**

The automatic cycle can be interrupted with the **STOP** button any time.

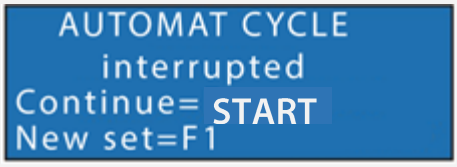

depending on the cutting program sequence in progress:

1. if the arm is already declining to cut, the cycle is only interrupted after the cut is completed
2. if the cycle is interrupted in the material cut-in sequence, the cut is interrupted immediately and the arm returns to the initial position
3. in all the other sequences, the cycle is interrupted immediately and the machine is waiting for further instructions according to the pertinent LCD.

By pushing the **START** button, you can restart the cycle

- **Material depleted**

If the end of the material divided has been detected or the machine has evaluated the state of insufficient material for further feeding, the automatic cycle is interrupted; the state is indicated on LCD

Information on the end of material or insufficient material can be detected by the limit switch or laser located in the rear part of the feeder. Functions of these two sensors are interconnected depending on the machine ability to recalculate the amount of lengths fed for the material end detection with regard to the specified length of the piece cut.

In this case, new material must be loaded and then the entered program continued.

New material loading - see description of the automatic cycle and related chapters.

After loading of new material and switch to the automatic mode, LCD is shown with the options to continue with the interrupted cycle or option for a change in the settings.

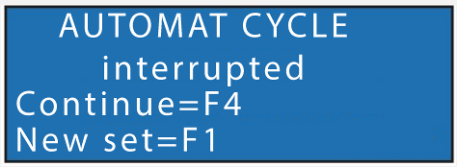

The "New entry" option enables return to the screen for programming the automatuic cycle, from which parameters of the individual programs can be changed or the initial program for the cycle following the interruption changed.

- **Emergency Stop Switch (TOTAL STOP)**

In the case of emergency, push the **Emergency Stop Switch.**

After you push the **Emergency Stop Switch**, all dangerous movements of the

machine are stopped immediately.

For safety reasons, the vice remains clamped (holding the material).

The screen appears:

Repeated putting into operation

1. Turn the **Emergency Stop Switch** in the direction of the arrow (on the button).
2. A prompt appears to confirm the error message:

3. Confirm the error message by pushing the F4 (=OK) button.
4. When prompt appears

5. Activate the machine safety circuit with the button on the machine control panel.

6. Lift the saw arm upwards over the material and push the **START** button.

3.5.3. Loading material before starting the automatic cycle

For correct course of the automatic cycle, it is important in which way the material is loaded before its actual start.

For safe and correct feed of the material in the automatic cycle, the following requirements must be satisfied:

1. Before start of the cycle, the material must be **loaded manually – that is, without the feeder) - to the main vice** – that is, under the saw band or to the cut-in length.

> ***Attention!***
> ***During loading, the material must not be fed to the main vice with the feeder! The material face may collide with the main vice.***

The collision risk results from the following factors:

- material dimensions and dimensional deviations
- material shape deviations
- feeder deviations during loading to the left or right (in mm)

2. **In the automatic cycle, it is possible to cut material with the minimum section height of 5mm.**

   If a material with lower height than 5mm is inserted in the automatic cycle, it will not be detected by the feeder laser.

3. **If the upper clamping (of the bundler) is installed, bundles with a section width smaller than the width of the bundler jaws must not be clamped by means of the bundlers.**

> *Attention!*
> ***If a material is inserted with a width smaller than the width of the bundler jaws, the bundler jaw will be clamped in the vice instead of the material.***
>
> ***Imminent risk of collisions – in the automatic cycle in particular!***

If a material is clamped with a width smaller than the upper clamping jaws width, and the upper clamping is active in particular, then:

Because the upper fixture jaw clamps together with the feeder vice**, the upper fixture jaw is clamped between the feeder vice jaws, the machine continues with the automatic cycle as if there was material clamped in the feeder!**

After automatic clamping of the upper fixture jaws, the main vice jaws are released! Material which will not be supported by the feeder may fall out of the main vice jaws and cause damage to the machine!

During automatic travel of the feeder to the feed length during the contínuing automatic cycle, the feeder may collide with the material!

4. To evaluate the optimum rest after cutting of material, it is necessary to load the material:

- either to be detected by the feeder laser immediately upon loading

- or to be detected by the feeder laser during the first feeder positioning to the given length after starting the automatic cycle

If the material is not detected by the feeder laser either during loading or the first feeding, it is necessary for safe course of the automatic cycle to evaluate parameters of the started cycle with regard to operating conditions of the machine - there is a risk of collisions!

Attention!

If the material is loaded in the machine in a way that it cannot be detected by the feeder laser either after loading of the material or after the first feeder positioning, and the operator wants to perform the automatic cycle even under these circumstances, the operator must carefully consider the material loading length with regard to the required cutting length according to the program and evaluate whether there is no risk of bad grasping of the material by the feeder in some step with subsequent risk of collisions!!

By confirming the "Yes" option on the screen with indication of the state "Material end not detected":

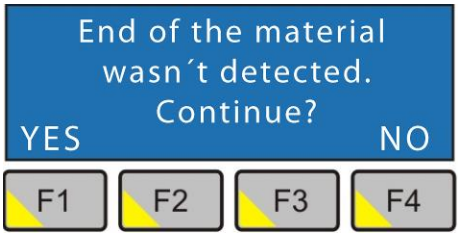

the operator confirms that s/he has considered the risk of a possible collision!

For details, see "Course of material feeding in the automatic cycle"

3.5.4. Course of material loading in the automatic cycle - risk of collisions

EXPLANATION:

After the automatic cycle is started (**F4** without cut-in, **START** after cut-ini), the **feeder first positions to the specified length (first positioning)** – that is, the feeder runs **to the position for loading the specified length of the first cut piece.**

According to the combination of the loaded material length and feeding length, the following cases may occur:

- <u>Case No. 1</u>

  Material is inserted in both vices so that:

  - **After loading of the** material, the feeder laser **detects the material.**
  - **During the first positioning** to the specified length, the feeder laser still **detects the material.**

  Riziko kolizí nehrozí.

Material feeding after starting the automatic cycle proceeds as follows:

1. **The feeder clamps the material in the prepared position for feeding the given length of the first cut piece** and feeds the first length.
2. Then the feeder executes the required number of feeds to cut up the given piece.
3. As soon as the laser detects the end of the material, the machine evaluates the remaining material length to finish cutting of the given material piece with the minimum possible material rest so that the material still remains supported by the feeder after cutting.
4. When the piece is cut down to the minimum possible rest of material, according to the given situation, the automatic cycle is either finished or interrupted.

   The display information indicates the automatic cycle state (finished/interrupted).

- <u>Case No. 2</u>

  - Material is loaded into both vices so that:
  - **After loading** of the material, the feeder laser **detects the material**
  - **During the first positioning** to the specified length, the laser **detects the material.**

  There is no risk of collisions.

  Material feeding after starting the automatic cycle proceeds as follows:

1. As soon as the laser detects the end of the material, the machine evaluates the remaining material length to finish cutting of the given material piece with the minimum possible rest of material so that the material still remains supported by the feeder after cutting.
2. **The feeder clamps the material in the prepared position for feeding the given length of the first cut piece** and feeds the first length.
3. Then the feeder executes the required number of feeds to cut up the given piece.
4. When the piece has been cut up to the minimum possible rest of material, according to the specific situation, the automatic cycle is either finished or interrupted.

   The display information indicates the automatic cycle state (finished/interrupted)

- <u>Case No. 3</u>

  Material is inserted in both vices so that:

  - **After the material is loaded**, the feeder laser **does not detect the material.**
  - **During the first positioning,** the feeder laser **will detect the material.**

  In this state of the machine, cut-in can be executed - see the procedure described in the automatic cycle.

  After the automatic cycle starts (**F4, START**), state indication appears on LCD:

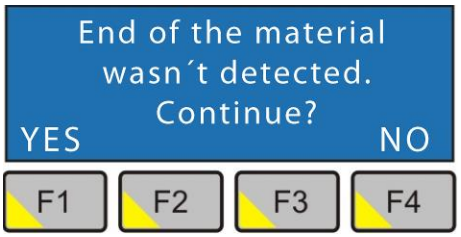

  The **F4 - NO** option - return to the option for program entry

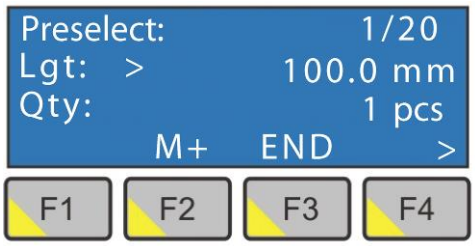

  The **F1 - YES** option- **screen appears for starting the automatic cycle**

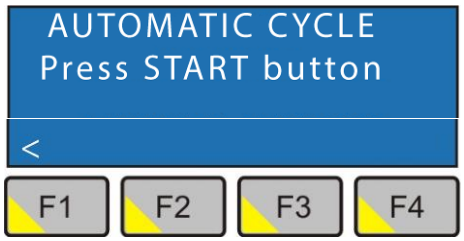

  . . .and after you push **START, the automatic cycle starts up**

> ***Attention!***
> *By confirming the "Yes" option on the screen indicating the state "Material end not detected", the operator confirms that s/he has considered the possible risk of collision!*

If the feeder laser detects the material during the first feed, after the automatic cycle is started, the material feeding proceeds in the same way as in the case No. 1 - there is no risk of collisions.

- <u>Case No. 4</u>

  Material is inserted in both vices so that:

  - **After the material is loaded**, the feeder laser **does NOT detect the material.**
  - **During the first positioning,** the feeder laser **will NOT detect the material.**

  In this state of the machine, cut-in can be executed - see the procedure described in the automatic cycle.

  After the automatic cycle starts (**F4, START**), state indication appears on LCD:

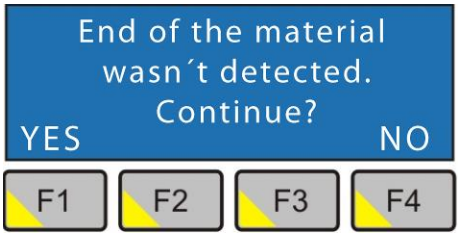

  The **F4 - NO** option - return to the option for program entry.

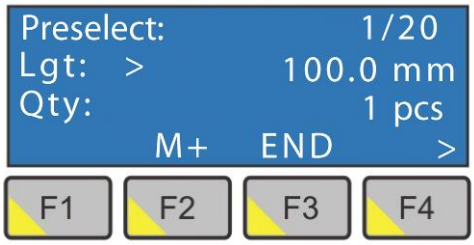

  The **F1 - YES** option- screen appears for starting the automatic cycle.

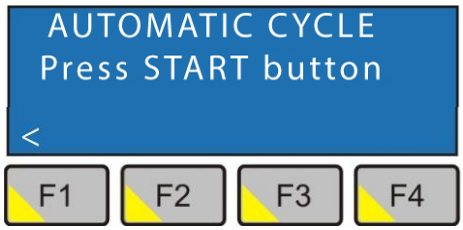

  … and after you push **START, the automatic cycle starts up.**

> ***Attention!***
> *By confirming the "Yes" option on the screen indicating the state "Material end not detected", the operator confirms that s/he has considered the possible risk of collision!*

> ***Attention!***
> *If the feeder laser did not detect material either after loading or during the first feeder positioning, there is a risk of the machine being damaged by falling material when the main vice jaws are released!*

If the feeder laser does not detect material either after loading or during the first positioning, one of the two situations may occur during material feeding after the automatic cycle start:

a) **The feeder moves away from the loaded material** when it is first positioned, clamping without the material and feeding the firs requested length are next operations.

b) during the first positioning, the feeder runs to the material in a way that the **material end gets between the feeder jaws, but it is not detected by the laser.**

The feeder clamps the material and the first feed to the required length will be started. Then (according to the specified cut-off lengths) the material can be grasped even several times again and further lengths loaded; however, because the material end is located before the feeder laser, **the machine still cannot detect the material end.**

If under the described situation the material is cut up so that during one of the following positionings **the feeder runs outside the material,** clamping without material and feeding of the next requested lenght follow**.**

In both cases, a) as well as b), the empty clamped feeder moves toward the main vice while the given length is fed. If some undetected material is located between the vice and feeder and if the vice jaws are clamped so that there is not a sufficient gap between them, the feeder will collide with the material.

3.6. Machine setup

Setup mode is activated by switching mode selection switch to position 0. After the switch is in position 0 on LCD is displayed:

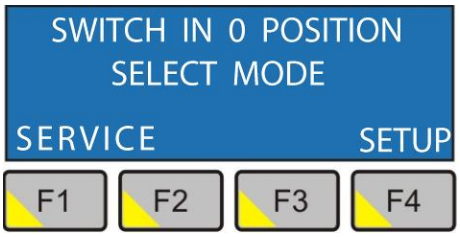

Parameters in the menu SERVICE are password protected. The parameters in the SETUP menu are common and are not password protected.

Password:	**947**

Numeric values can be entered by means of the numerical keyboard installed on the control buttons.

Deletion of entered values - key C  .

3.6.1. SETUP

on LCD	Description
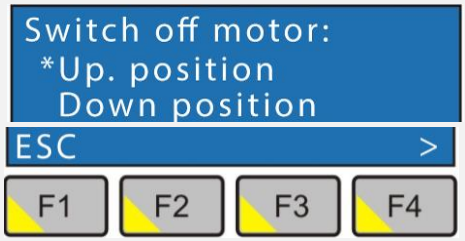	**Turn off saw blade drive** after cut: • Up. position – saw blade lifts after cut and saw blade drive is turned off above material. • Down position – saw blade drive is turned off immediately after cut. **F1** back **F4** next option **F2 – browsing though the lines**

on LCD	Description
	**Cooling** • Do not use – cooling is off, suitable for cutting special materials such as cast iron • With saw blade engine – when the blade is running, also cooling pump is running. **F1** back **F4** next option F2 – browsing through the options
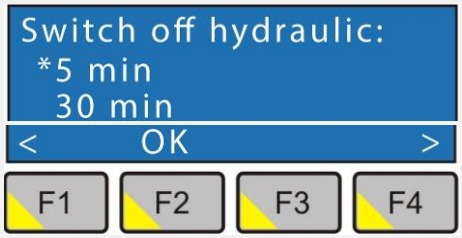	**Switch of time for hydraulic unit**: • 5 min. – 30 min. – do not turn off **F1** back **F4** next option **F2 – confirmation of the entered value**
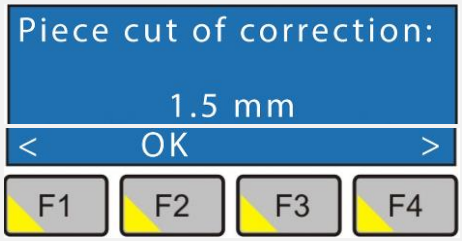	**Piece cut off** • The settings for the proper cut lengths in automatic mode • Saw blade thickness **F1** back **F4** next option **F2 – confirmation of the entered value**
	**Language:** • Choose control menu language • After setting a new language in this screen, you must switch the machine off and on to change the language of the screens. **F1** back **F4** next option **F2 – browsing through the options**
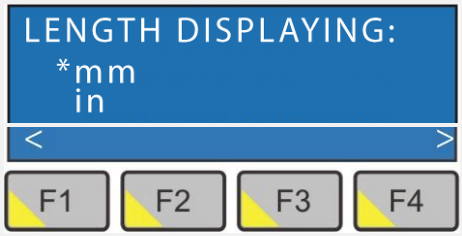	**Units for lengths** • mm or inches • restart machine to apply change **F1** back **F4** next option **F2 – browsing though the lines**

3.6.2. SERVICE

Home screen of the SERVICE menu

By means of the numeric keyboard on the control buttons, enter the password to open the menu.

Heslo:	947

on LCD	Description
	• **Feed length** – Specifies the length of the feeder. Do not change parameter – is set from the factory. • **F1** back, **F4** next option, **F2** save current option
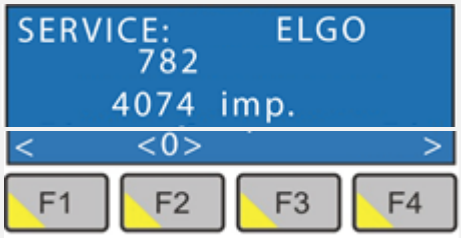	• **ELGO** – feeder position admeasurement. **Do not change!** • For service purposes. Displays a variable number of linear pulse measurements • **F1** back, **F4** next option, **F2** save current option
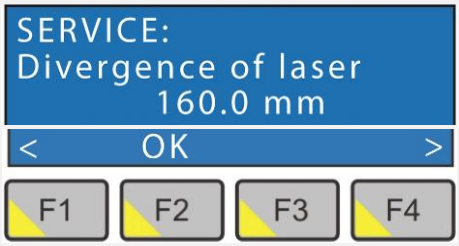	• **Laser deviation** • The laser is placed behind the feeder vise jaws • The entered value has direct influence on the material lenght clamped in the feeder vice and direct influence on safety of the machine operation. If the clamped lenght is too short there is a risk of releasing of the material from the feeder vice and there is danger of injury ort he machine damage! **Do not change the value set by manufacturer without considering of all risks!** • The value has influence on the smallest residual piece for using of the feeder. • **F1** back, **F4** next option, **F2** save current option

on LCD	Description
SERVICE: Main vice open.time 60 < OK > F1 F2 F3 F4	• **Opening time for main vice.** • Opening time is in milliseconds. • **F1** back, **F4** next option, **F2** save current option
SERVICE: Feed vice open.time 40 < OK > F1 F2 F3 F4	• **Opening time for feeding vice** • Opening time is in milliseconds. • **F1** back, **F4** next option, **F2** save current option
Feeder correction: 0.0 mm < OK <+/-> > F1 F2 F3 F4	• **Multiple feed correction** • Correction of length deviations during loading by the feeder. • **F1** back, **F4** next option, **F2** save current option • **+ / -** sign change – with keys I + 0 -
Proficut 275.230GANC < <F2> > F1 F2 F3 F4	• **Machine name** • **F1** back, **F4** next option, • **F2 browsing through the options**

If you choose to change the keyboard units from "inch" to "mm", there is no automatic conversion of constants in machine setup „Servis“ and „Setup“.

It is necessary to calculate by the formula: 1 inch=25,4 mm a 3,28 ft/min=1m/min.

It is necessary to calculate these values:

Machine setup „Setup“:

- Piece cut of correction (when calculating the unit "inch“ rounded to 1 decimal place = 0.0 inch)

Machine setup „Servis“:

- Feeder length (when calculating the unit "inch“ it has to be rounded to 1 decimal place = 0.0 inch)
- Divergence of laser (when calculating the unit "inch“ it has to be rounded to 3 decimal places = 0.000 inch)
- Feeding correction (when calculating the unit "inch“ it has to be rounded to 3 decimal places = 0.000 inch)

3.7. Error messages

Error	Description
SAFETY BUTTON is OFF	**The safety circuit** is not turned on (pos. 2 on control panel). Push safety circuit button (on pos. no. 2 on control panel) to remove error message.
TOTALSTOP pressed	Emergency Stop Switch (Total Stop) is active – pushed. Turn **Emergency Stop Switch** by the arrows, and disable it. Press **F4** to confirm the disorder.
Blade tension faulty	Saw belt not is properly tensioned. Remove the fault and press **F4** to confirm.
Faulty motor protec.	Motor overload, thermal protection is activated. Do not overload blade engine! Remove the fault and press F4 to confirm.

3.8. Band saw adjusting

3.8.1. Adjusting the cutting angle

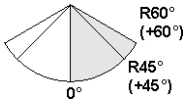

The cut angle can be varied from **0°** to **60°**.

1. Lift the saw frame and release-securing lever of the console.

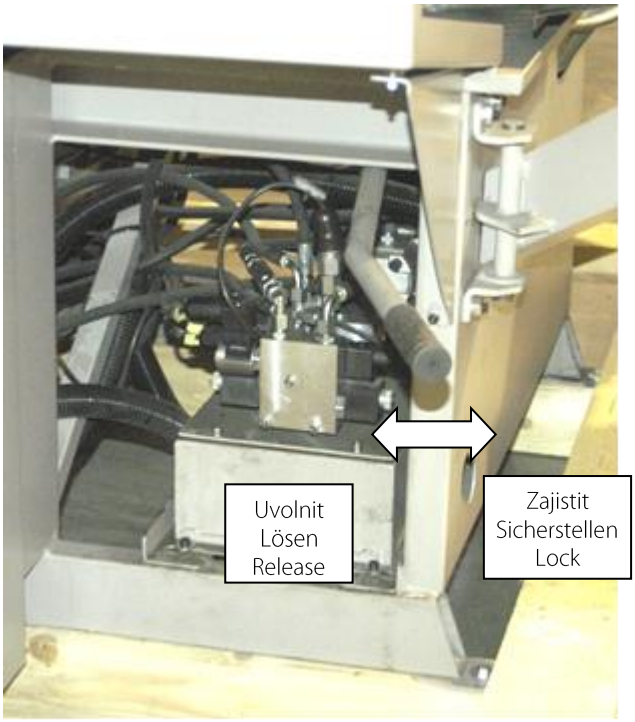

2.

3. Set the desired angle of the cut according to the scale on the turning console.
4. Tighten the securing lever of the console.

Caution!

It is possible to cut angles to +45° in the automatic mode, angles bigger than +45° or equal to+45° can be cut only in the manual mode – without usint of the feeder.

For angles bigger than + 30 °, the feed of the feeder is reduced and the length of the smallest residue piece is increased.

3.8.2. Cutting speed setting

If the machine is equipped with a frequency converter, its controller for setting the band speed is located on the control panel. The band speed can be set within the interval of 40 to 80 m.min^{-1}.

3.8.3. Speed adjusting of the arm lowering

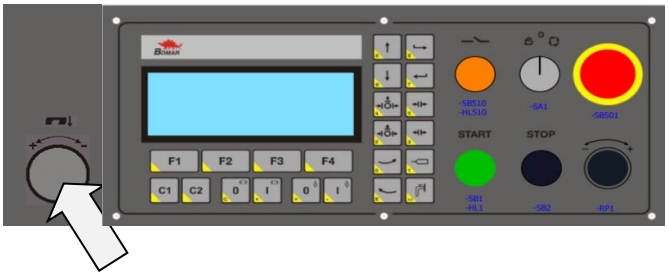

Set the speed of the arm lowering to the cut by control valve (position 21 – control panel).

- Set the **lower** speed of the arm lowering to the cut by turning the switch **clockwise**
- Set the **higher** speed of the arm lowering to the cut by turning the switch **anti-clockwise.**

Notice: If you keep closing the throttle valve too tightly, the valve seat may wear off which causes its leakage. Therefore, close the valve always gently!

3.8.4. Optimal adjusting of the guide cubes span

If you want to achieve a smooth and precise cut, it is helpful to position the guide cube as close as possible to the material.

1. Release the lever of the left listel and move left part of the guide apparatus so that the left guide cube edge is as close to the cut material as possible.
2. Lower the frame to the lower position and check the position of the guide cube towards vice loading area. The guide cube must be a distance of at least 10 mm from the vice loading area.
3. Tighten the lever of the gib and check the guide cube setting once more for possible collision with binding table or vice jaw.

3.8.5. Vice jaws setting

To clamp the cut material correctly, it is necessary to set the sliding jaws of the main vice and the feeder vice near to the material with regard to the stroke of the clamping cylinders.

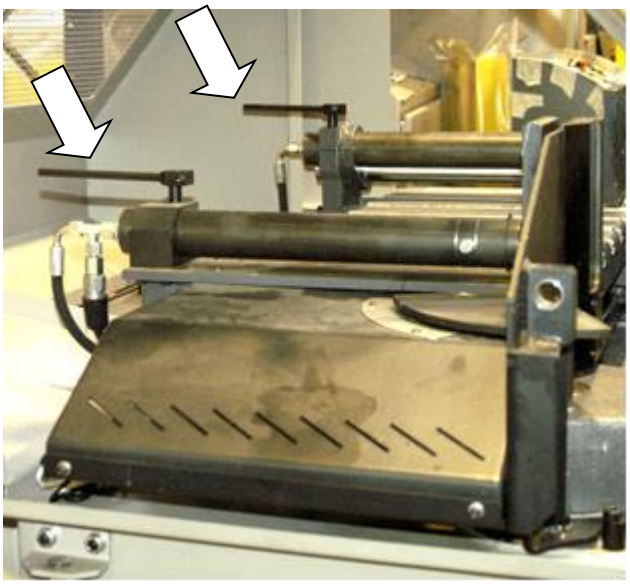

1. Push the locking pin of the detent lever and turn the detent lever to release shift of the jaws.

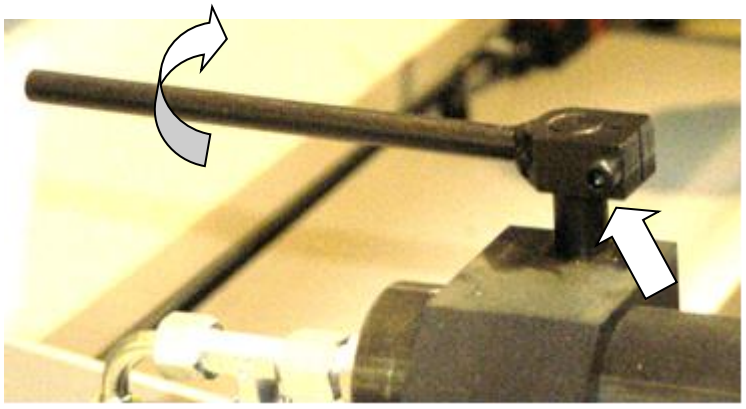

2. Shift the jaw to the position necessary for firm clamping of the vice

3. Turn the locking lever to move the jaw.

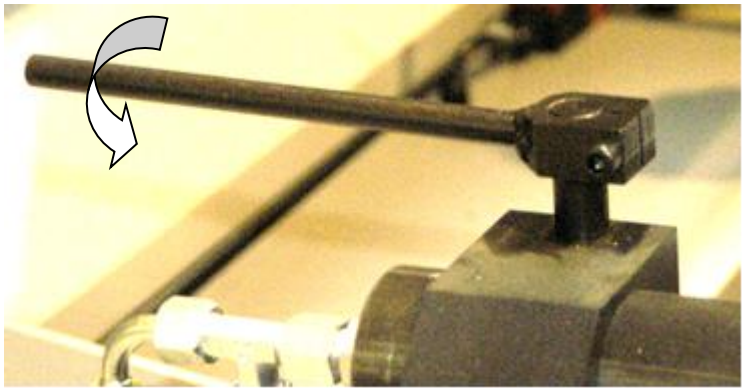

4. Insert material and try to clamp it to verify whether it is clamped firmly.

3.8.6. Setting the height of the saw arm over the material

The setting of the saw arm upper position is accomplished by an incremental sensor (see arrow).

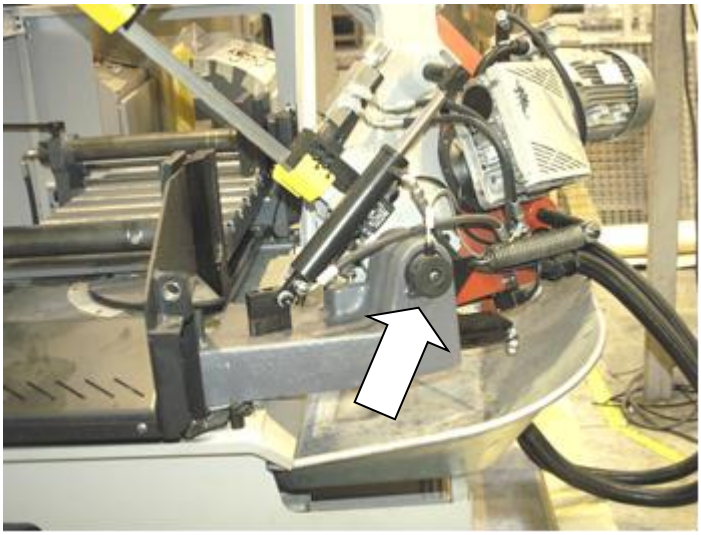

Setting procedure:

1. Insert a material into the vice
2. Press the button **Arm up**  and lift the saw arm to the uppermost position.
3. Carefully lower the saw arm to the material using the button **Arm down** 
   (or  + **F1** for **rapid move**). Stop about 5-10 mm above the material.
4. In the case the upper arm position is set by the incremental sensor, an onscreen message saying that the upper arm position is adjusted will be displayed.
5. Press **START** to begin the cutting process.

6. Saw band cuts material and the arm moves to the lower position. After reaching the lower position the arm returns automatically to the upper position, where it was before the cutting cycle was started with the **START** button.

The sensor is adjusted by the manufacturer and needs not to be readjusted.

3.8.7. Brush adjustment

The brush for chip removal from the saw band influences cutting durability, saw band lifetime and wheels lifetime, hard metal guides and finally the cut accuracy. **Brush adjustment must be checked every shift.**

1. Open the saw arm cover.
2. Adjust the position of brush to the saw band by turning the adjusting bolt (see arrow) of the brush..

3. Set the brush to the saw band.

   The brush must touch with teeth of the saw band.

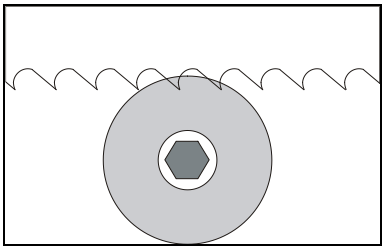

Attention!
*The brush **must not** touch the bottom of the saw teeth!*

4. Fasten the adjusting bolt of the brush and switch on the drive of the saw band. If the brush is set properly, it runs together with the saw band.
5. Close the saw arm cover.

3.8.8. Cutting pressure regulation

The band saw is equipped with cutting pressure regulation on the right guiding cube.

Pressure regulation is performed with regulation wheel on the guiding cube. Screw on the wheel – downfeed pressure is bigger. Screw off the wheel – downfeed pressure is smaller.

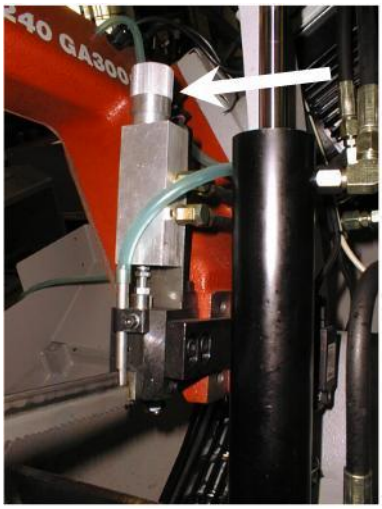

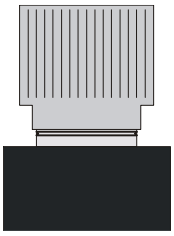

One visible neck

Solid material over ∅200 mm..

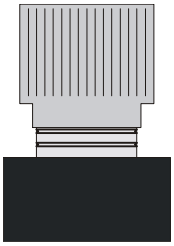

Two visible necks

Solid material from ∅100 to ∅200 mm.

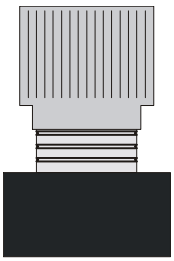

Three visible necks

Pipes and shapes material with surface from 10 - 15 mm.

I - shaped material from 200 - 500 mm.

Solid material to ∅100 mm..

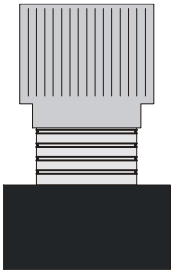

Four visible necks

Pipes and shapes material with surface to 10 mm.

I - shaped material to 200 mm.

3.8.9. Bundling system setting (optional accessory)

To hold the cut material during cutting better, we recommend using of **the bundling system – optional accessory.**

The bundling system is particularly suitable for clamping bundles of material or material of irregular cross-sections.

The bundling system consists of:

- Bundlers on the main vice

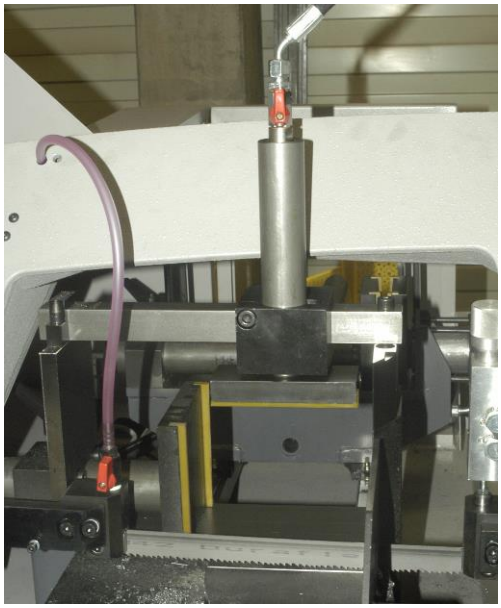

- Bundlers on the feeder vice

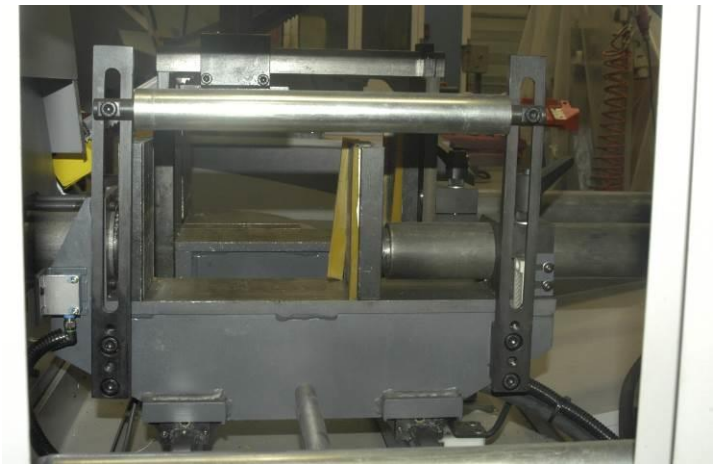

- **Setting the main vice bundler**

a) Horizontal position setting

1. Release the bundler jaw carriage by loosening the detent screws

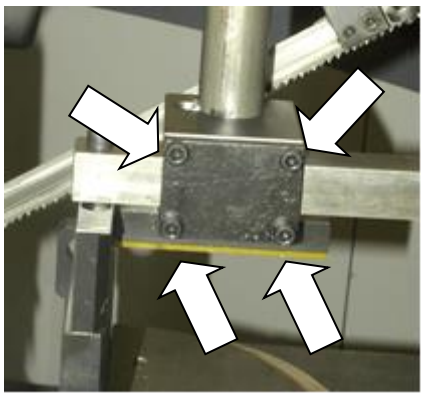

2. Shift the jaw over the required clamping place
3. Lock the bundler against sliding by tightening the locking screws

b) Vertical position setting

The bundler jaw height must be set with regard to the material height and the bundler clamping cylinder stroke.

1. Release the bundler clamping cylinder by loosening the detent screw

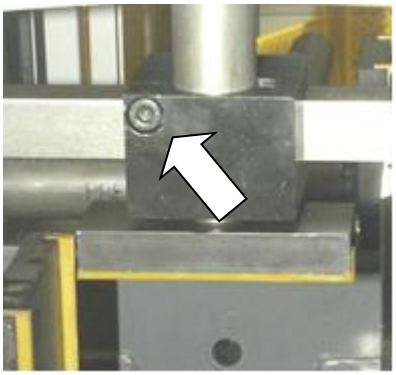

2. Shift the jaw to the correct height according to the material dimensions so that the clamping cylinder stroke be sufficient to clamp the material..
3. Lock the bundler clamping cylinder against sliding by tightening the locking screw.

The bundler jaw on the main vice can be put out of operation by tightening the cock on the clamping cylinder inlet.

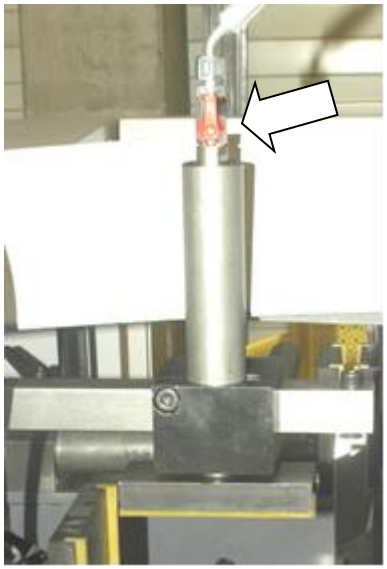

- **Setting of the feeder vice bundler**

  1. Release the screws locking the retaining cylinder.

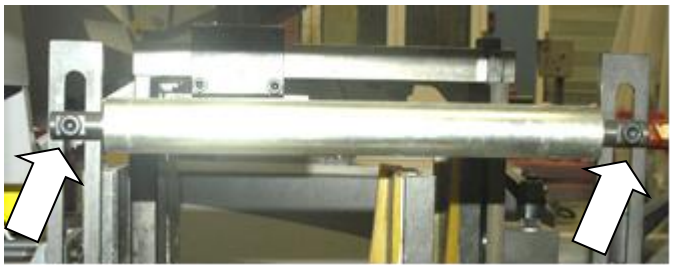

  2. Shift the retaining cylinder to the correct height according to the material dimensions so that the clamped material is secured against tilting on the top..

Caution!

The bundling jaw reduces the range of cutting heights.

If you want to cut full height, the bundling device must be dismantled.

To dismantle the main vice bundler, loosen the crossbar clamping screws.

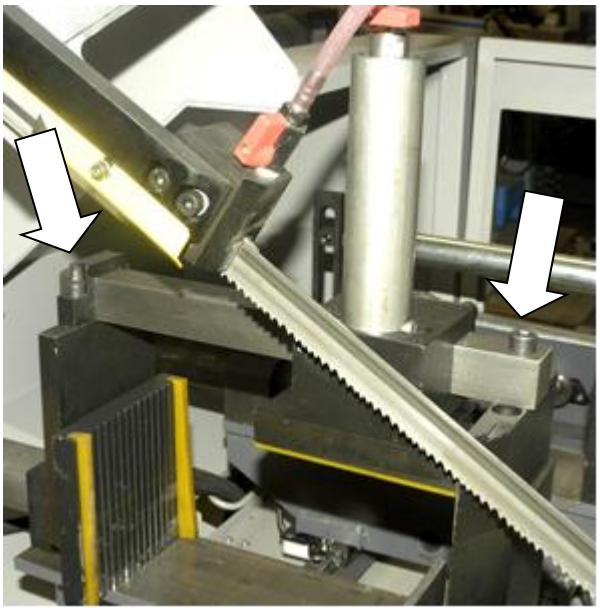

To dismantle the feeder vice bundler, remove the screws locking the retaining cylinder.

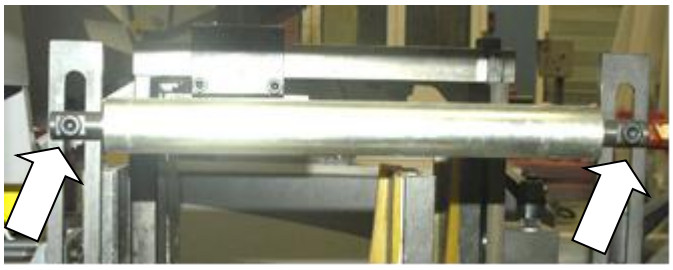

Caution!
If the top clamping devices (bundlers) are installed and used, it is forbidden to clamp pieces or bundles which have less width than the upper clampig jaws.
There is a risk of colisions – especially in the automatic mode!

3.9. Material insertion

3.9.1. Safety notes

Never walk under a suspended load!

Never climb onto the gravity-roller conveyor!

Do not hold the material for clamping material to the vice! The vice can cause injury!

3.9.2. Handling agent selection

Use the strong handling agents to lift and transfer the material

Handle with the material only with the lift truck or use the suspension strands and the crane!

Do not use the lift truck or crane in case that you do not have the licence to handle with it!

3.9.3. Material insertion

Insert material to the vice and ensure that the material cannot move in the vice or fall from the vice after the clamping.

If you cut long pieces of the material (for example rod, tube), you must use the roller conveyors for material shifting to the band saw. The roller conveyors are described in the chapter „**Roller conveyors and accessories**".

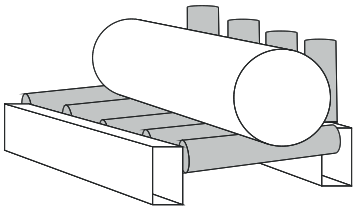

Make sure the conveyor is long enough and the material cannot tip off the conveyor.

For round material, make sure that it was leaning against at least two vertical rollers of a roller conveyor could not fall!

3.9.4. Bundle material cutting

Attention:
Manualbundle clamping device is not standard equipment.
Without this device is a not possible cut bundle.
If a clamper is installed on the machine, the maximum thickness of the materials in half.

If you want to cut the material in the bundle, there are suggestions for the positioning of bundles

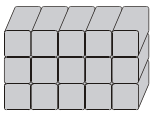

Round material bundle: Take care especially with round material that the bars are put according to the picture. If the bars are put differently, you may have problems with movement.

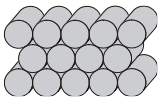

Always weld the material at the rear end of the bundle to secure it from moving.

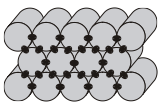

Attention!: Before welding always, switch the machine off at the main switch! The magnetic fields, which often occur during welding, may damage the controls**!**

Attention:
Not all material shapes are suitable for bundle cuts. Keep the recommendation of your supplier of the saw bands for material insertion to the bundle.

In order to keep the cut material better in a vice, we recommend using **hydraulic bundles material** that does not belong to the standard equipment of the machine, but is an optional accessory. It is particularly suitable when cutting uneven material.

4. Údržba stroje / Machine maintenance / Wartung

4.1. Saw band dismantling

1. Turn the saw arm to the angle 0°.
2. Lift the arm to its uppermost position using the button for lifting of the arm on the control panel. Stop the saw arm in the upper position using the governing valve.
3. Switch off the machine.
4. Remove the safety covers of the band. The covers are tightened with screws.

5. Open the back cover of the arm. It is mounted with two plastic head screws.

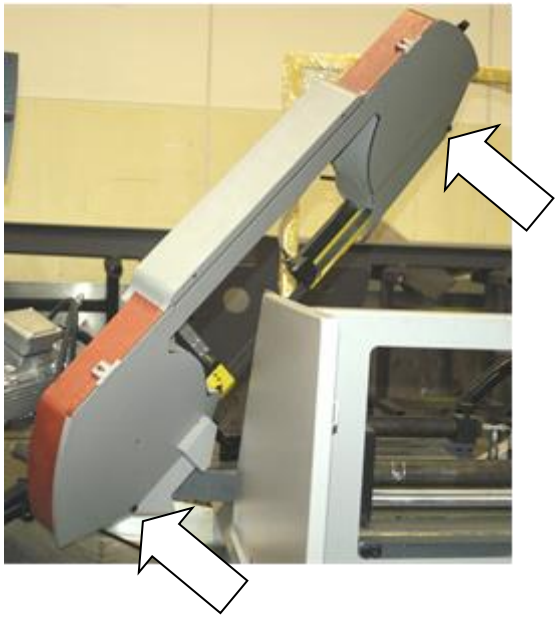

6. Loosen the holder of the brush and turn the brush away from the band so it does not hinder the dismantling of the band.

7. By turning the tightening star to the left loosen the stretching of the band.

8. Pull the saw band from the wheels.
9. After that pull out the band carefully from the guiding cubes.

4.2. Saw band installation

1. **Prior to installation, clean the track wheels, guiding cubes and inner side of the arm thoroughly of all traces of chips and dirt.**

   <u>Keep in mind the teeth direction when installing the saw band.</u>

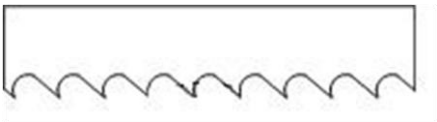

2. Turn the saw arm to the angle 0°.
3. Lift the arm to its uppermost position using the button for lifting of the arm on the control panel. Stop the saw arm In the upper position using the governing valve.

4. Switch off the machine.
5. Insert a new saw band in the guide cubes. Make sure the saw band runs between both guiding rollers and that it is pushed all the way to the top.
6. Put the saw band on both guiding wheels. Make sure that the saw band ridge fits tightly to the wheel rim. Push the saw band as close to the rim as possible.

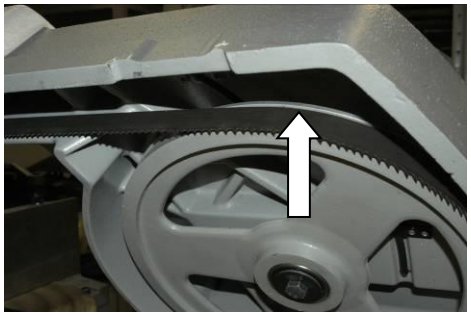

7. Turn the tightening star to the right until you gently stretch the band. Now you can remove the plastic cover on the saw band.

8. Adjust the brush to the saw band.

9. Close the back cover and secure it with two plastic head screws.

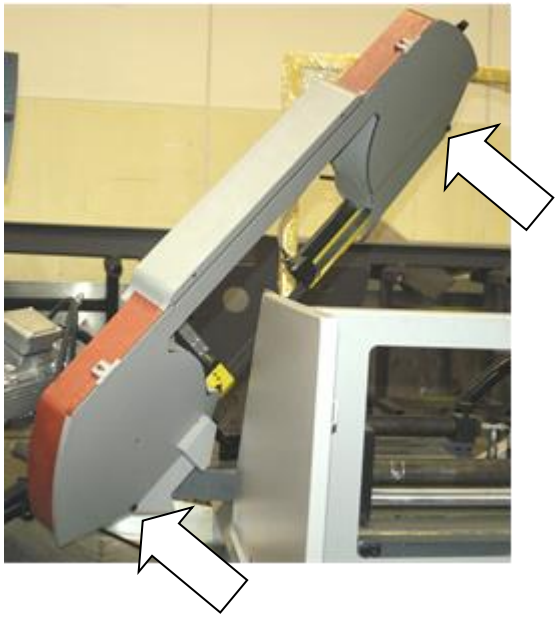

10. Mount the yellow safety covers of the band.

Arrow on the cover must agree with the direction of the teeth. If it does not, you have to flip the saw band.

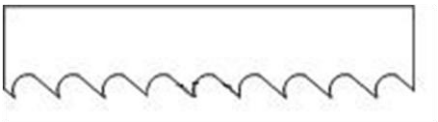

4.3. Saw band stretching and inspection

Correct saw band stretching is one of the most important factors, which influences accuracy and saw band lifespan. Stretch the saw bands according to the band saw and the selected saw band type. Keep to the recommendation of your manufacturer.

Pilový pás Sägeband Saw band	Napětí pilového pásu Sägebandspannung Blade tension	Napětí pilového pásu PSI (pro Tenzomat) Sägebandspannung PSI (für Tenzomat) Blade tension PSI (for Tenzomat)
20 x 0,9 mm	160 $N.mm^{-2}$	23 500
27 x 0,9 mm	180 $N.mm^{-2}$	26 500
34 x 1,1 mm	210 $N.mm^{-2}$	30 500
41 x 1,3 mm	240 $N.mm^{-2}$	35 000
54 x 1,3 mm	240 $N.mm^{-2}$	35 000
54 x 1,6 mm	280 $N.mm^{-2}$	40 600
67 x 1,6 mm	290 $N.mm^{-2}$	42 000
80 x 1,6 mm	300 $N.mm^{-2}$	43 500

4.3.1. Saw band stretching

1. After installation of the saw band stretch it gently, so it does not fall of the wheels.

2. Mount the Tenzomat on the saw band and secure it with screws.
3. Stretch the saw band until it is stretched to the recommended value.

For a quick control of the tension of the band there is an indicator near the tightening star. If the indicator agrees with the picture bellow, the band is stretched correctly.

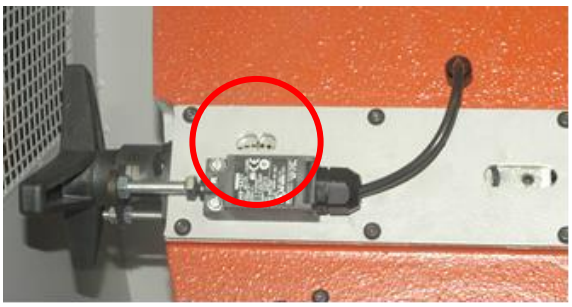

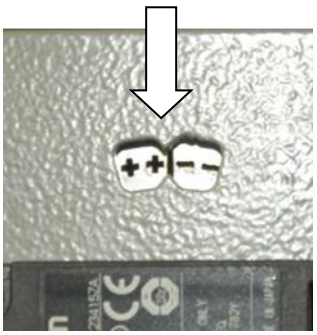

4.4. Setting of the saw band run at the tensioning wheel

Regularly check the saw band run at the tensioning wheel. Especially when the saw band was replaced, it is important to set the run properly.

4.4.1. Saw band inspection

If the band does not run correctly, following problems can appear:

- **The band falls down from the wheels** – the band or the protective cover of the band can be damaged.
- **The band runs on the rim of the stretching wheel –** the band or the rim of the wheel can be damaged.

Inspection procedure:

1. Switch on briefly the saw band drive and then switch it off
2. Disconnect the saw from the electrical network.
3. Open cover of the wheels
4. Check the position of the saw band on the both wheels.

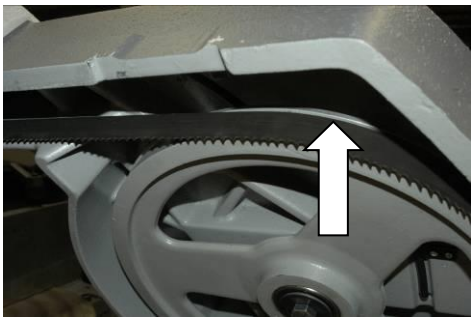

- If the distance between backside of the saw band and the wheel rim is **1 mm**, the setting is right.
- If the distance is bigger than **1 mm**, or the saw band runs on the rim of the wheel, adjust the saw band.

5. Close cover of the saw band.

4.5. Adjustment

4.5.1. Saw band run adjustment

The saw band run is set with screw in the stretching cube on the saw frame. Optimal distance has been determined at **1mm.**

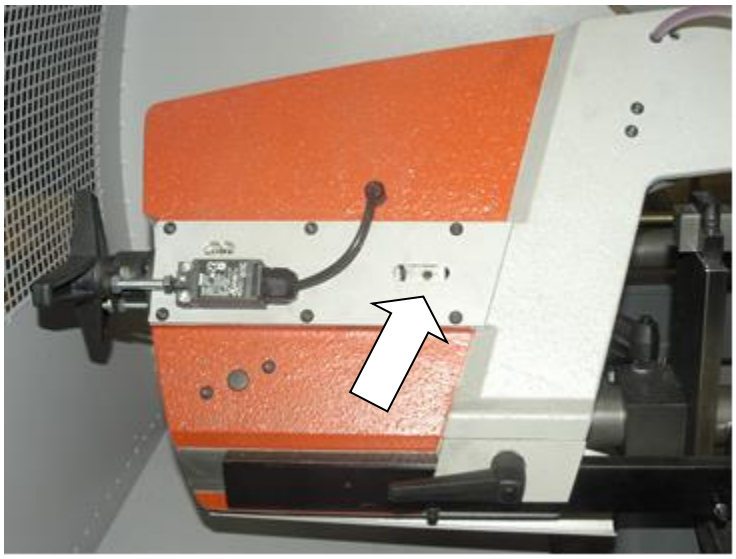

- Turn the screw to the right, the saw band closes to the stretching wheel rim
- Turn by screw to the left, the saw band departs from the stretching wheel rim

After setting check the saw band run again.

4.5.2. Hard metal guides adjustment on the machine

Hard metal guides adjustment is one of the most important criterions which influence cutting accuracy and saw band lifespan. Therefore it is essential to check that the adjustment of the hard metal guides is correct

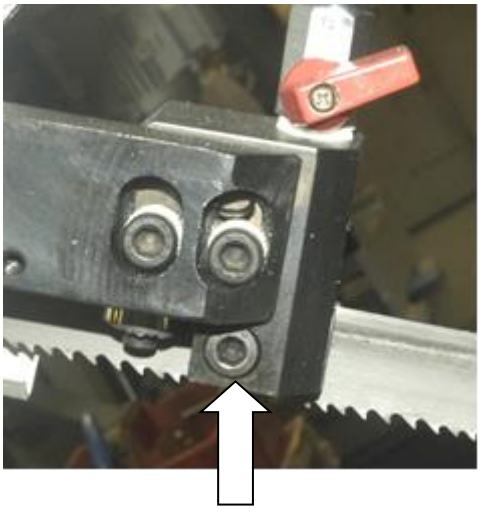

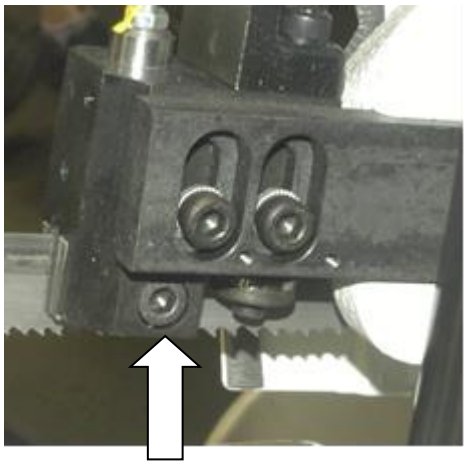

1. Tighten the screw on the side of guide cube so that the band is loosened
2. Loosen the screw slowly and let the hard metal plate touch the band. You must be able to turn the screw by hand. Set the hard metal guiding on the right cube in the same way.
3. Make sure that the hard metal guides do not put up to much resistance otherwise the lifetime of the saw band and drive decreases.

4.5.3. Guiding cube adjustment

Cutting quality and saw band life is also dependent on guide cubes adjustment

Therefore this adjustment has to be checked periodically

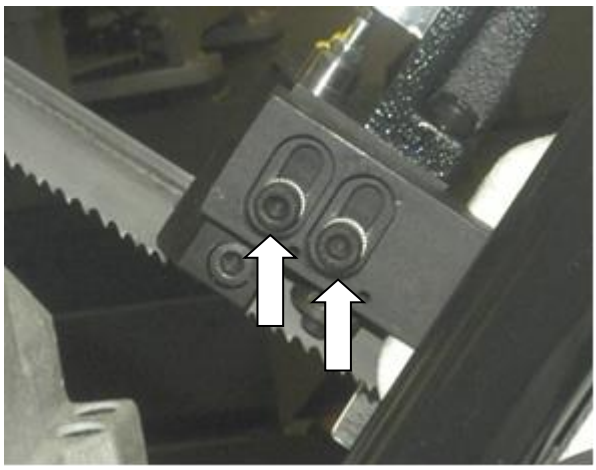

1. Loosen both mounting screws on the guide cubes and push it carefully to the band. Make sure the saw band is not bent; otherwise the cube will press against the band and damage it
2. Fasten both tightening screws again

> ***Notice:***
> If the guide cube is correctly adjusted, the upper edge of the cube and the ruler are parallel.

4.5.4. Adjusting the limit switch of the saw band stretching

After the saw band is replaced, the limit switch setting must be checked. If the limit switch is not set correctly, the band is stretched either too much or too little.

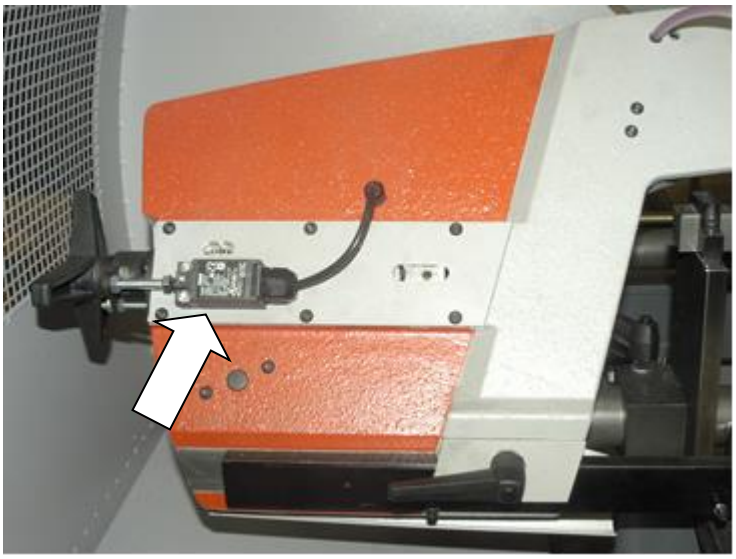

1. Stretch the band with help of the TENZOMAT to an optimal value (Tenzomat chart)
2. Release the nut on the stop screw
3. Start the band drive. Two scenarios may occur:
   - If the engine is switched on, but it does not run, turn the screw to the left until the engine starts to run
   - If the engine runs turn the screw to the right until it stops, then turn the screw shortly to the left until the engine starts running again
4. Fasten the stop screw with the nut and check the setting of the switch again.

4.5.5. Saw frame lower position stop adjustment

The lower stop limits the lowest position of the saw frame. This stop has to be checked at least once a month. If the lower stop is adjusted incorrectly, the loading surface of the table can be cut too deeply or the material will not be cut completely.

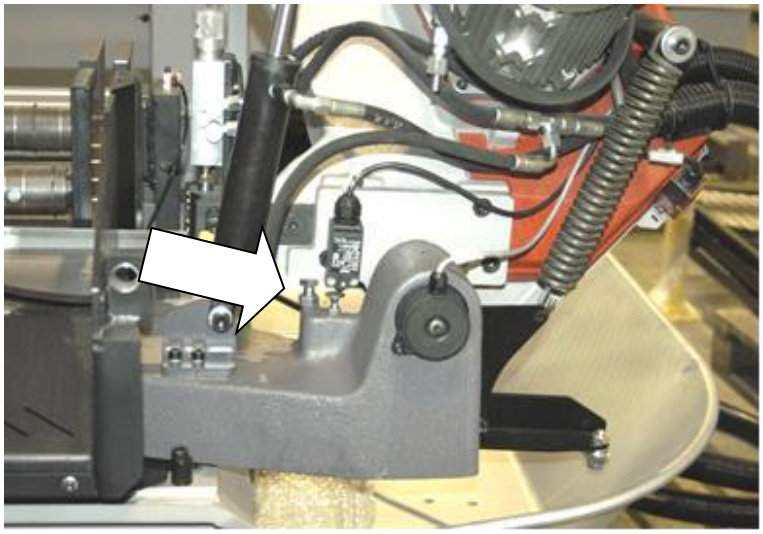

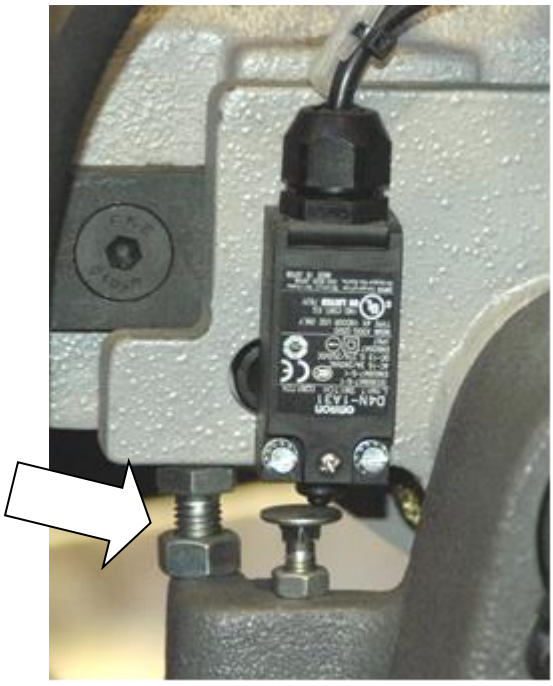

1. Raise the saw frame to the upper position
2. Release the nut of the adjusting screw and adjust the stop
3. Fasten the adjusting screw with the nut again
4. Set the limit switch of the lower arm position

4.5.6. Adjustment of the limit switch of saw frame lower stop

If you have adjusted the lower stop of the saw frame, the limit switch adjustment inspection is required.

Setting check

Lower the arm to the lowest position. If the arm lays on the lower stop and the switch reacts, the setting is correct. In other case carry out the switch setting

Switch setting

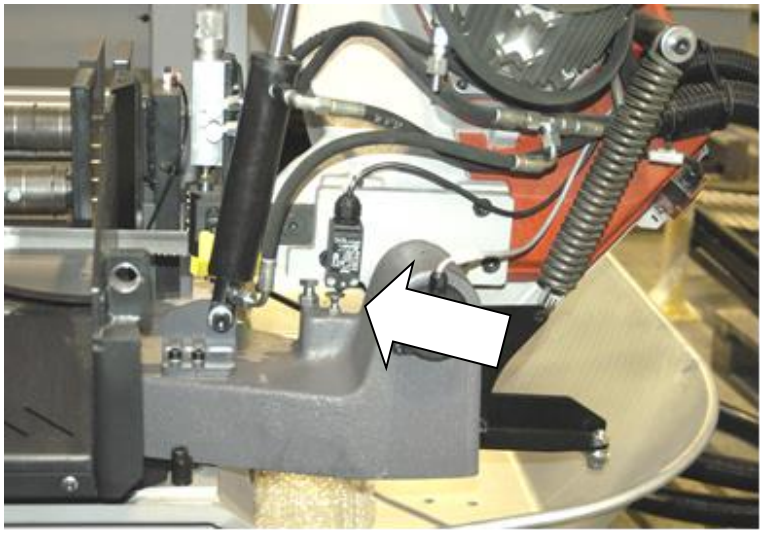

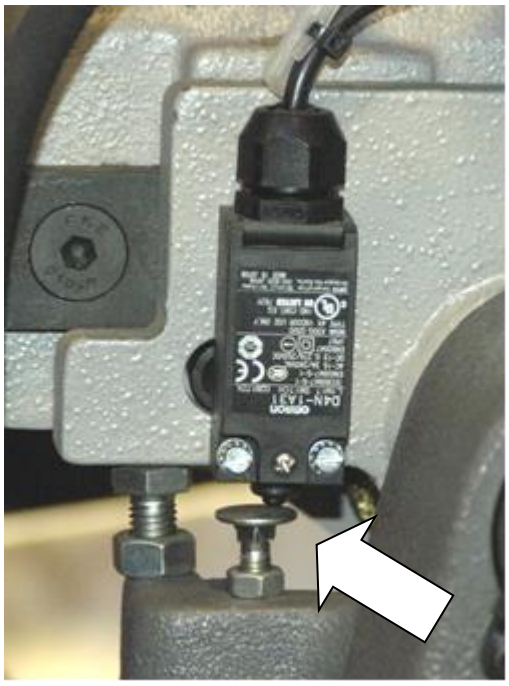

1. Release the nut of the stop screw and screw down the stop screw
2. Lower the arm to the lower stop and turn on the band driver
3. Screw out the stop screw until the band driver stops
4. Secure the screw with nut again and check the limit switch setting once more

4.5.7. Adjustment of a throttle valve

Switch off the machine by its main switch. Let the sawing head down at the bottom.
Close the throttle valve gently.

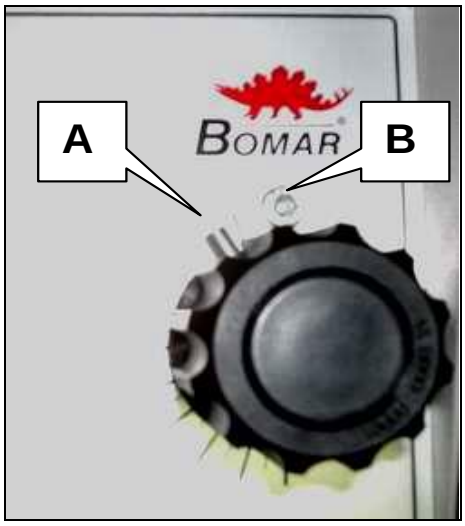

The worm screw (pos. A) must be next to the stop (pos. B), when the valve is closed.

Otherwise, you must loosen the worm screw, lift the plastic knob and close the throttle valve to the maximum. Next loosen the worm screw and take off the plastic knob. Put it back so that the worm screw must be next to the stop while the valve is closed. Then tighten the worm screw again.

Turn the machine on and test the down-feed control.

4.5.8. Adjustment of the regulating pressure to the cut

Device for regulation of the pressure to the cut is primarily set by the manufacturer.

Do not manipulate with adjustment of the device if you do not have serious reason!

Adjustment procedure:

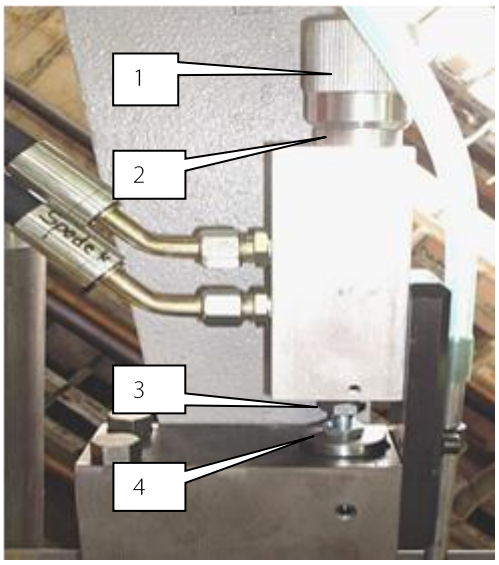

1. Set the body of the regulation by adjusting handle. It is under the handle. Set it on the second groove. There is visible one neck (pos. 1, 2).
2. Screw the stopper screw to the maximum, or the valve will be blocked (pos. 3)
3. Now the frame can be freely moved up only, because the saw frame movement is blocked with the governing valve
4. Press button „ saw frame down „ screw on the setscrew

5. Screw in the stop screw as long as you reach the optimal speed of the frame sinking
6. Optimal speed of the frame sinking is between 40-50 sec.from max.lift.
7. Secure the adjusting screw by means of the nut after reaching of the sinking speed
8. Switch on the engine of the drive and check speed of the saw frame sinking again

4.6. Cooling agents and chip disposal

The quality of the cooling agent will deteriorate due to:	If the solution is too weak:	If the solution is too strong:
• use of contaminated water • oil contamination from the outside (hydraulics, gears) • high operating temperatures • lack of air circulation • wrong concentration	• corrosion protection is diminished • lubrication decreases • microbial attack is more likely	• the cooling ability is decreased • foam production increases • emulsions stability deteriorates • sticky residue develops

4.6.1. Coolant inspection

The state of the cooling agent has a significant influence on the cutting quality and on the lifespan of the machine. Lifetime of the cooling liquid is 1 year, after this time we recommend change the cooling liquid. This time is dependent on the degree of pollution of the cooling liquid (especially with oils) and on other factors.

> ***Note:***
> *If the state of the cooling liquid is not satisfactory, the cooling liquid must be replaced.*

Check level of the cooling liquid and function of the pump periodically!

Check the state of the cooling agent according to the following table:

Testing	Interval	Method	Condition	Precaution
Liquid level	daily	visually	too low	check concentration, add water or emulsion
Concentration	daily	refractometer densimeter	too high too low	refill water refill base emulsion
Smell	daily	by sense of smell	unpleasant smell	good ventilation, add biocides or replace coolant
Contamination	daily	by sense of smell	visible oil leaks, sludge fungi	surface cleaning, fix leaks, add biocides or fungicides; clean the system with a cleanser* prior to the coolant replacement
Corrosion-protection	when necessary	visually chip test Herbert-test	insufficient corrosion protection	test stability, if necessary – increase concentration or pH value
Stability	when necessary	refractometer	oiling	add concentrate, enquire the supplier
Foam reaction	when necessary	shaking test	too much foam, foam disperses too slowly	avoid aeration, increase water hardness, fix with defoamer

* According to manufacturer's instructions

4.6.2. Cooling liquid preparation

Prepare a mixture of water and cooling liquid. Conform the notes of the manufacturer and keep the manufacturer's-approved concentration

All instructions are stated on the tank of the cooling liquid or in documentation of the cooling liquid. For cooling liquid usage and disposal heed the instructions of the manufacturer.

Fill the mixture of water and cooling liquid to the tank of the cooling system

When filling the tank with the cooling liquid take care that the liquid will not drip out of the tank and the tank does not overflow

Keep to the manufacturer specified recommendations for adding the anticorrosive agents, the antifreeze or other agents! Mixing two chemicals can produce toxic and aggressive substances, which can damage your health or the cooling system of the machine

Note: If the machine is equipped with Microniser (see. **Special accessory**), fill the tank of the Microniser with specified cooling liquid. Then the microniser is ready for the operation

The quality of the cooling agent will deteriorate due to:

- use of contaminated water
- outside oil contamination (hydraulics, gears)
- high operating temperatures
- lack of air circulation
- wrong concentration

If the solution is too weak:

- corrosion protection is diminished
- lubrication decreases
- microbial attack is more likely

If the solution is too strong:

- the cooling ability is decreased
- foam behavior increases
- emulsions stability deteriorates
- sticky residue develops

4.6.3. Chips disposal

Chips resulting from cutting operations must be disposed of in accordance with the relevant regulations.

Let the chips drip excess fluid!

Put the chips into a watertight container. Make sure that the container does not leak, because even after a long dripping time, the chips still contain coolant residues.

Place the container into the care of a disposal company equipped for the disposal of chips contaminated with cooling liquid. In case the machine is equipped with micronisation device, the chips must also be handed over to a disposal company.

4.7. Gearbox oils and greases

4.7.1. Gearbox oils

In gearboxes, oil is used for the whole lifetime of the gearbox. We recommend replacing of the filling oil in case of repair.

Use oils with DIN 51517 specification for the gearboxes. Select the ISO VG viscosity class according to the original oil.

Attention:
When replacing the oil, use oils recommended by BOMAR or oils from other manufacturers, which have comparable parameters. Do not forget, that mineral and synthetic oils must not be mixed!

Check the transmission seal oil regularly for leaks - at least three times a month

Recommended oils and quantity according to the type of the band saw

Band saw	Gearbox oil	Capacity
Ergonomic 320.258 GANC	Paramo PP7	2,0 l
Chip remover	Shell Tivela S 320	0,075 l

Comparative table of the gearbox oils

Manufacturer	Viscosity grade		
	ISO VG 100	ISO VG 220	ISO VG 320
BP	Energol GR-XP 100	Energol GR-XP 220	Energol GR-XP 320
Castrol	Alpha SP 100 Alpha MW 100	Alpha SP 220 Alpha MW 220	
Elf	Reductelf SP 100	Reductelf SP 220 Reductelf Synthese 220	Reductelf SP 320
Esso	Spartan EP 100	Spartan EP 220	Spartan EP 320
Mobil	Mobilgear 627	Mobilgear SHC 220 Mobilgear 630	Mobilgear 632
ÖMV		PG 220	
Paramo	PP 7	Paramo CLP 220	Paramo CLP 320
Shell	Shell Omala 100	Shell Omala 220 Shell Tivela S 220	Shell Omala 320 Shell Tivela S 320
Total	Carter EP 100	Carter EP 220	Carter EP 320

4.7.2. Lubrication greases

For lubrication we recommend using lithium based class NGLI-2 saponified grease. Different greases are mixable, if their oil bases and density classes are identical.

Comparative table of the lubricant greases:

Manufacturer	Type of the lubricant grease
BP	Energrease LS - EP
DEA	Paragon EP1
Esso	FETT EGL 3144
	Beacon EP 1
	Beacon EP 2
FINA	FINA LICAL M12
Klüber	Microlube GB0
	Staburags NBU8EP
	Isoflex Spezial
Optimol	Optimol Longtime PD 0, PD1, PD2
Shell Aseol AG	ASEOL Litea EP 806-077
Texaco	Multifak EP1

4.7.3. Lubrication

There are several assemblies on the machine, that have to be lubricated to ensure the correct function of the machine.

Place for lubrication	Description
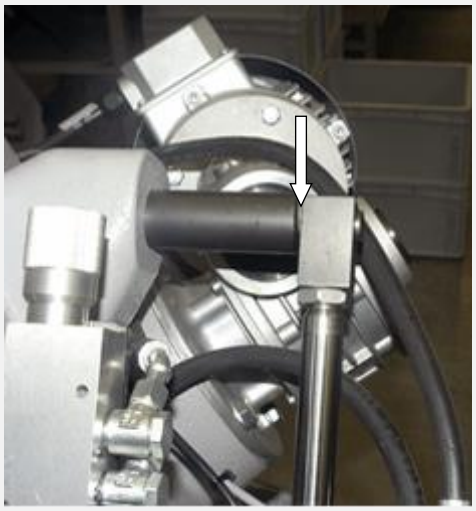	The upper pivot of the lifting cylinder – drip oil once a week.

Place for lubrication	Description
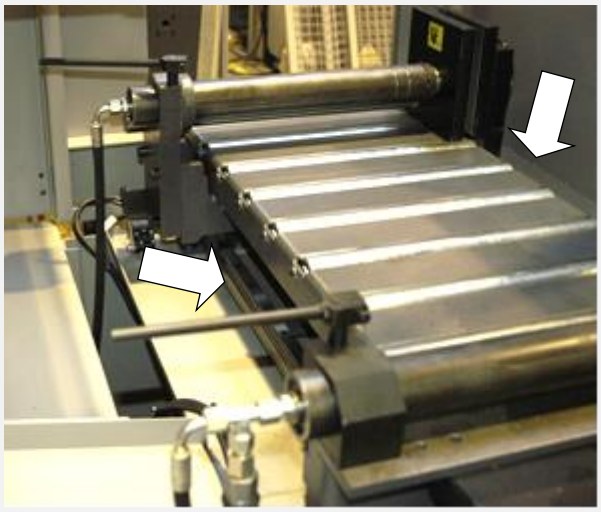	**Linear guide of the feeder trolley** **2 lubricators** Lubricate with grease once a three months (see chapter Lubricant greases). Use 3–5g grease on the every carriage of the linear guiding. Use the grease gun to the lubrication. Drive 3–5 times whole line of the linear guiding during lubrication.

4.7.4. Hydraulic oils

Replace the hydraulic oil once every 2 years, because the oil properties can deteriorate and cause problems with the hydraulic equipment. If the hydraulic system is equipped with filter (2SF 56/48-0,063), replace the filter too.

Filling plug is located on top of the tank, drain hole is located at the bottom of the tank.

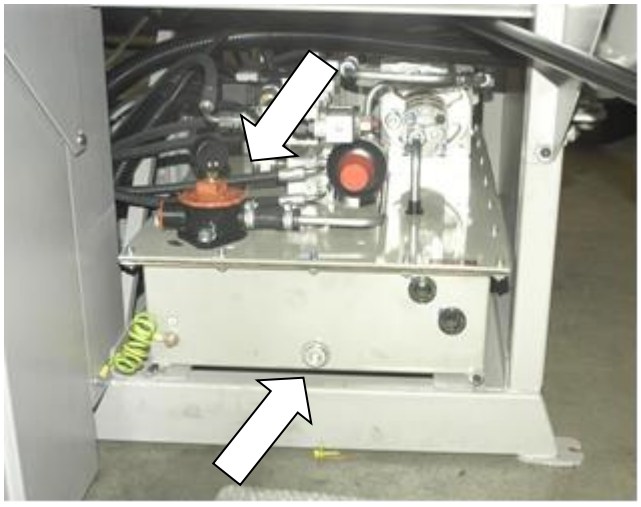

Use oils with specification DIN 51524-HLP, ISO 6743-4 and viscosity class ISO VG 32 in hydraulic aggregates. Hydraulic oils quantity – see chapter Hydraulic oil level check.

Note:
When replacing the oil, use oils recommended by BOMAR or oils, from other manufacturers which have comparable parameters. Do not forget, that mineral and synthetic oils must not be mixed!

Comparative table of the hydraulic oils:

Manufacturer	Type	Manufacturer	Type
Agip	Oso 32	Ina	Hidraol 32 HD
Aral	Vitam GF 32	Klüber	Lamora HLP 32
Avia	Avilub RSL 32	Hungary	Hidrokomol P 32
Benzina	OH-HM 32	Mobil	Mobil DTE 25
BP	Energol HLP 32	ÖMV	HLP 32
Bulgaria	MX-M/32	Poland	Hydrol 30
Castrol	Hyspin AWS 32	Rumania	H 32 EP
Čepro	Mogul HM 32	Russia	IGP 30
DEA	Astron HLP 4hy6	Shell	Tellus Oil 32
Elf	Elfolna 32	Sun	Sunvis 846 WR
Esso	Nuto H 32	Texaco	Rando HD B 32
Fam	HD 5040	Valvoline	Ultramax AW 32
Fina	Hydran 32		

4.7.5. Hydraulic unit service

After 50 hours working time, or the latest 3 month after the first run, the first service should be carried out. This includes:

- checking off all screws and connections, fixing points, tubes and hoses for leakage
- Check hydraulic oil level

The oil level must be located between the two halves of the glasses

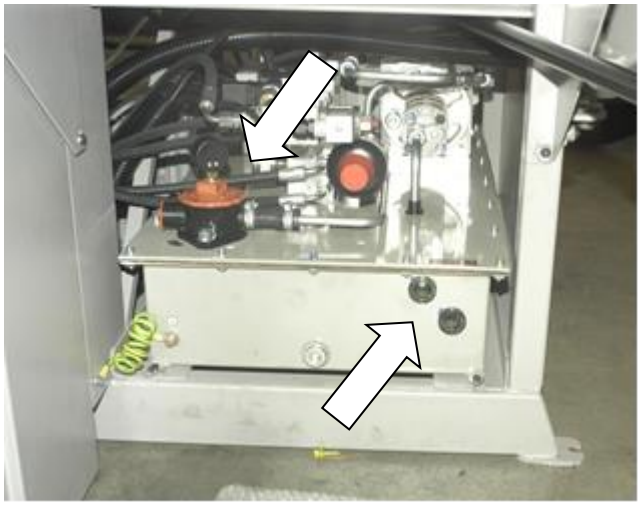

- During time of duty the oil temperature shouldn´t exceed 60-70°C
- check function of signaling components (thermometer, level gauge, dirty filter indicator)
- Check the adjustment of working pressure

To realise a high reliability of the power pack, the manufacturer lays down following inspection intervals

Interval	daily	weekly	monthly	three monthly	six monthly	annually
Hydraulic fluid						
Level	-	•	-	-	-	-
Temperature	-	•	-	-	-	-
Condition	-	-	•	-	-	-
Change interval	-	-	-	-	-	•
Filter						
Change interval	Dle indikace	-	-	-	-	-
Other checks						
External Leakages	•	-	-	-	-	-
Contamination	•	-	-	-	-	-
Damages	•	•	-	-	-	-
Noise-(level)	•	-	-	-	-	-
Gauges	-	-	•	-	-	-

4.8. Machine cleaning

Clean the machine off cooling agent and impurities after every shift. Conserve the guiding surfaces, mainly.

- Guiding of the clamping jaws of the main and feeder vice.
- Guiding of the feeder.
- The loading surface of the main and feeder vice
- Thread rod of the main and feeder vice

4.9. Worn pieces replacement

4.9.1. Hard metal guides replacement

Note:
If the hard metal guides cannot be adjusted, they have to be replaced.

1. Remove the hosepipe leading to the cooling agent and dismantle saw band and saw band guiding cube.

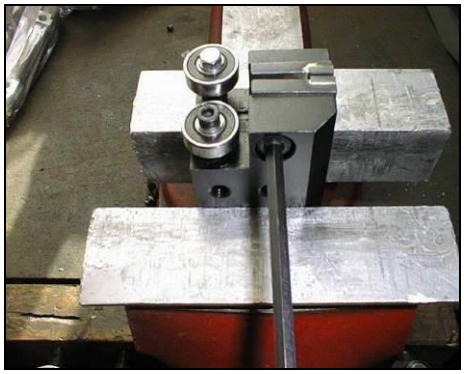

2. Fasten the guiding cube to the vice and screw out the screws of both the hard metal desks.

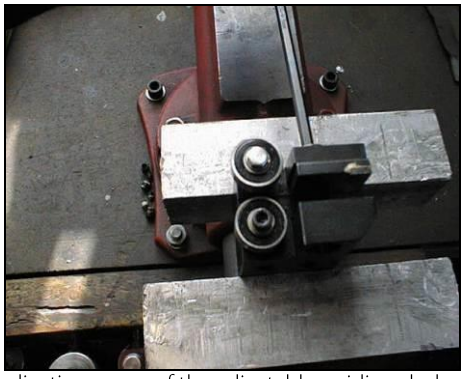

3. Screw out the adjusting screw of the adjustable guiding desk as far from the guide cube so that it is not possible to see it from the inner side.
4. Now insert new hard metal guides and fasten them tightly and fasten the guide cube to the gib.
5. Install the saw band and adjust guide cube and hard metal guides.

4.9.2. Saw band guiding rollers replacement

If the saw band is not sufficiently guided by guiding rollers and/or if the rollers are obviously worn, the rollers should be replaced.

Attention!
Guiding rollers must be replaced together on both guide cubes!

1. Remove the hosepipe leading to the cooling agent and dismantle saw band and saw band guide cube.

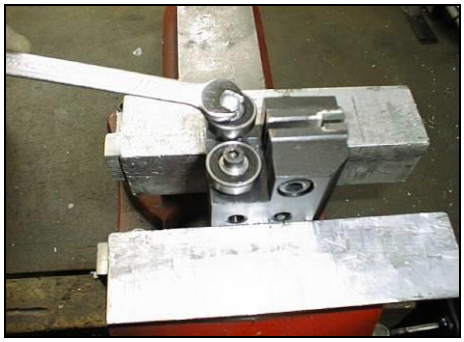

2. Grip the guide cube in the vice and screw out both fastening screws of the eccentrics.

3. Pull both guide rollers from their eccentrics.

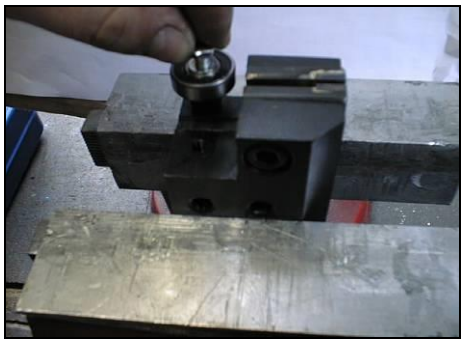

4. Put new guide rollers on the eccentrics and screw the eccentrics to the guide cube.

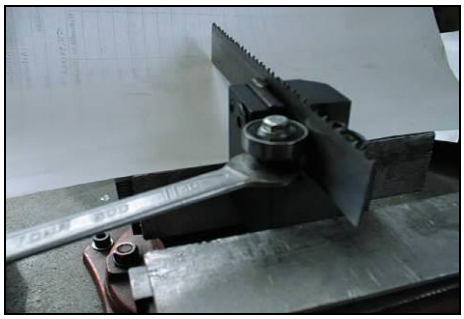

5. Now insert a test piece of saw band (cca 15 - 20 cm) into the guide cube. Adjust both eccentrics so that the band runs in the middle of milled groove. This groove is located between both eccentrics.

Note:
Guide rollers may not press too much on the band, but they must spin freely.Optimal distance between band and roller is 0,05mm.

6. Install the cube on the gib. Install the saw band and adjust guiding cubes.

4.9.3. Stretching wheel replacement

1. Dismantle the saw band.

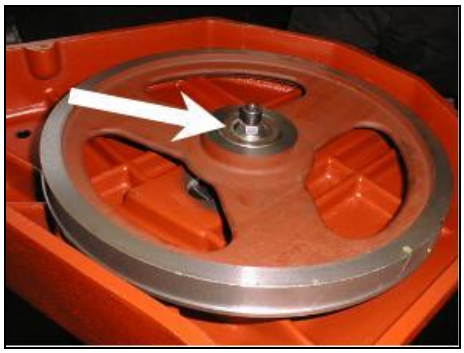

2. Screw off the stretching wheel screw and remove the washer.
3. Screw the auxiliary screw onto the shaft of the stretching wheel.

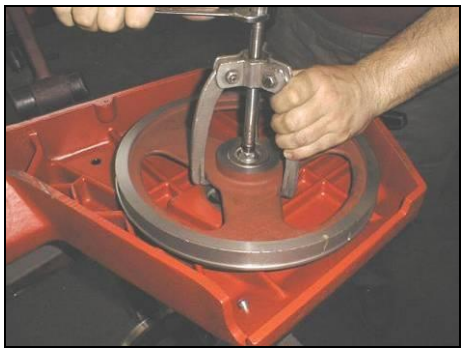

4. Put on the three-leg puller on the stretching wheel and pull off it from the shaft.

5. If the lower bearing stays on the shaft, pull of it from the shaft with a two-leg puller. Check both bearings; eventually replace them for new ones.

6. Insert the retaining ring into the hole of the new stretching wheel.

7. Insert a bearing into the hole in the wheel and push it to the retaining ring.

8. Clean the shaft and oil it. Install the new stretching wheel on the shaft.

9. Install the distance ring on the shaft and push it to the lower bearing.

10. Install second bearing on the shaft and push it to the distance ring.

11. Install the washer and screw on the stretching wheel.
12. Install the saw band. Wheel replacement is done.

4.9.4. Driving wheel replacement

1. Dismantle the saw band.

2. Screw of the fastening screw of the driving wheel and pull off the washer.
3. Screw on the auxiliary screw to the driving shaft.

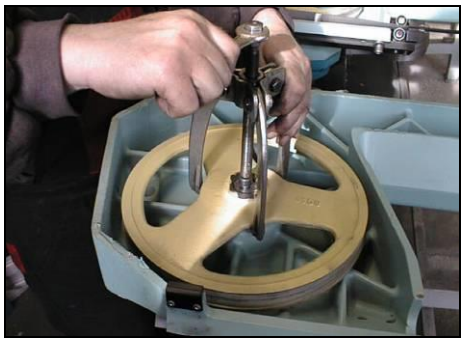

4. Install the three-leg puller on the driving wheel and pull off it from the shaft.

5. Check, if the spring and the driving shaft are not damaged. Contact your supplier for parts replacement.

6. If the shaft and the feather are in good order, clean them, oil them and install them on the driving shaft.

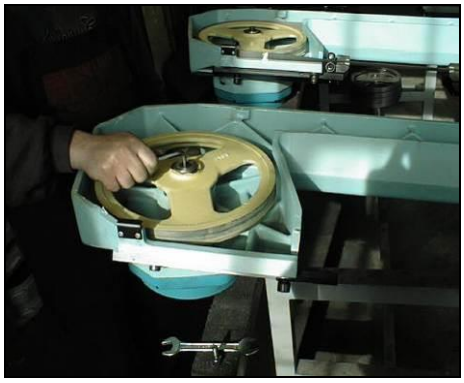

7. Install the washer and screw on the driving wheel.
8. Install the saw band.

4.9.5. Round brush replacement

If the chip removing brush is not able to fulfil its function, it has to be replaced.

1. Open the cover of the band arm
2. Hold shaft of the brush by wrench.
3. Release the nut on the brush, replace worn brush on the new brush, screw on the nut.

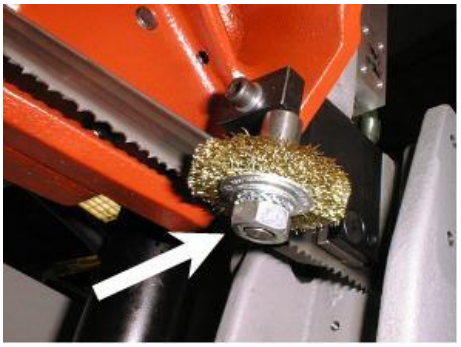

4. Adjust the brush to the saw band .
5. Close saw arm cover

5. Závady / Troubleshooting / Störungen

5.1. Mechanical problems

Problem	Possible causes	Repair
1. Slanting cut	- Wrongly adjusted hard metal guides.	Set according to the chapter „Servicing and adjustment“
	- Worn hard metal guides.	Replace to the chapter „Worn pieces replacement“
	- Wrongly adjusted cubes of the saw band guiding.	Set according to the chapter „Servicing and adjustment“
	- Worn bearings of the saw band guiding.	Replace according to the chapter „Worn pieces replacement“
	- Wrongly adjusted swarf brush.	Set according to the chapter „Servicing and adjustment“
	- Worn swarf brush.	Replace according to the chapter „Worn pieces replacement“
	- Insufficient saw band stretching.	Rise the saw band stretching and set the limit switch.
	- Wrongly chosen tooth system of the saw band.	Replace the saw band and keep the instructions of manufacturer on new saw band choice.
	- Worn saw band.	Replace the saw band.
	- Wrongly balanced roller conveyor.	Set the roller conveyor.
	- Dirty feeding board.	Cleanse the feeding board from debris, chip and residue material.
	- Guiding arm and guiding cube are loosened.	Clamp the guiding arm.
	- Guiding arm and cube are too far from the material.	Set the guiding cube to the material.
	- Too fast cutting rate.	Lower the material feeding speed.
	- Unexpected oscillation in material quality.	Set the cut and feeding speed to the relevant material.
2. The cut is not cut upon desired angle	- Securing lever is loosened.	Check the securing lever efficiency and carry out its adjustment according to chapter „Servicing and adjustment“.
	- Set angle does not match the cut angle.	Check the angle adjustment with a protractor and possibly set it according to chapter „Servicing and adjustment“.
	- Insufficient saw band stretching.	Stretch the saw band and set the limit switch according to chapter „Servicing and adjustment“.
	- Guiding arm and guiding cube are loosened.	Fasten the guiding arm and the cube.
	- Dirt between material and clamping jaw.	Cleanse the material and mating jaw.
3. Short lifetime of the saw band	- Insufficient saw band stretching.	Raise the tightening of the saw band set the scanner of saw band tightening according to chapter „Servicing and adjustment“.
	- Worn swarf brush.	Check the swarf brush condition and replace it in case of excessive use as described in chapter „Worn pieces replacement“
	- Wrongly adjusted swarf brush.	Check swarf brush adjustment, set it according to chapter „Servicing and adjustment“
	- Over stretched saw band	Lower stretching of the saw band and set the limit switch of the saw band stretching according to chapter „Servicing and adjustment“
	- Wrongly adjusted hard metal guides.	Check the adjustment of the hard metal guides and carry out adjustment as described in chapter „Servicing and adjustment“
	- Worn hard metal guides of the saw band.	Check the condition of the hard metal guide and if it is too worn, replace hard metal guides according to chapter „Worn pieces replacement“

Problem	Possible causes	Repair
	- Worn saw band guide bearings.	Check guiding bearings and if you notice some sort of excessive damage, replace them according to chapter„Worn pieces replacement“
	- Wrongly adjusted guiding cubes of the saw band.	Set guiding cube according to chapter „Servicing and adjustment“
	- Wrongly adjusted down feed and saw band speed.	Adjust the feeding and speed of a saw band according to values published by saw band manufacturer.
	- Different material quality.	Adjust feeding and speed of a saw band according to desired material (try cut-test).
	- Low-class saw band	Replace the saw band (contact your local accessory supplier for more information)
	- Wrongly chosen saw band tooth system.	Replace the saw band and keep instructions of the manufacturer on the choice.
	- Wrongly adjusted tracking.	Check the space between top of a saw band and driving wheel. Perhaps adjust the tracking as described in chapter „Servicing and adjustment“
4. Insufficient cut output.	- Worn saw band.	Replace the saw band and keep instructions of the manufacturer on the choice.
	- Wrong saw band tooth system.	Replace the saw band and keep instructions of the manufacturer on the choice.
	- Wrongly set down feed and speed of a saw band.	Set feed and speed of a saw band according to values published by saw band manufacturer.
5. The cut is not finished.	- Wrongly adjusted lower stop point of the saw frame.	Check lower limit switch and screw.
	- Stop point surface is messed-up.	Cleanse stop point surface of the limit switch from debris and residue material.
6. By choke is not possible turn	- Metal clamps between valve and panel.	Clamps must be removed and put on the shaft O-Ring about 10x2 mm.
	- Metal clams are in body of valve.	Valve must be cleared or changed.
7. Saw band drive cannot be started.	- Pressure switch is adjusted wrong.	Set the pressure switch according to chapter „Servicing and adjustment“
	- Pressure switch is defective.	Replace defective parts of the pressure switch.
8. The saw bands are cracked.	- In stretching wheel is wrong adjusting geometry.	Adjust distance band from recess wheel c.2 mm according to operating instructions.
	- Hard metal plates of circuit saw band are not adjusting.	Hard metal plates of circuit saw band must be adjusting according to operating instructions.
	- Guiding cubes are not adjusting (bearings + hard metal circuit)	Guiding cubes must be adjusting (bearings + hard metal circuit) according to operating instructions.
	- Bearings of guiding cubes are used (rolling elements are damaged or outside ring of bearing has conical form).	Bearings of guiding cubes must be replaced. Bearings must be adjusting according to operating instructions.
9. Damage tooth system of the saw band	- In gripping the lifting cylinder is backlash.	
	- Squeezed pin upper or downer holder of the lifting cylinder.	Exchange complete upper or downer holder of lifting cylinder.
10. The saw is cut downing.	- Geometry of hardmetal guiding cubes is wrong adjusted.	Hardmetal guiding cubes must be adjusted.
	- Bearings of guiding cubes are used.	Bearings of guiding cubes must be replaced.
11. Cleansing of the saw band is not functional.	- Elastic wheel of the brush drive is worn-down.	Elastic wheel of the brush must be changed.
	- Knurling of the driving wheel is worn-down.	Driving wheel must be changed.
	- The shaft of the brush drive is rusted.	The shaft of the brush must be cleaned and oiled.

Problem	Possible causes	Repair
	- The brush position and the brush cover is adjusted wrong – with the brush cannot be turned.	The brush cover must be posed, in order to the brush can be turned.
12. The saw arm periodically rise and fall during the cut; this cause short lifetime of the saw band.	- Backslash in driving wheel lodgement on the shaft.	Change the driving shaft for a long one, new bearings, distance ring, new driving wheel, spring, two covers on the forehead of the shaft + screws.
	- Worn channel for spring.	

5.2. Electric problems

Problem	Possible causes	Repair
1. Machine is not possible start.	- In socket is not voltage	Line voltage must be checked.
	- Transfer relay is closed (thermal protector)	Each FA relay must be checked.
	- Limit switch of saw band stretching, cover of frame or cover of saw band is not started.	Check of saw band stretching and covers closing.
2. When cut is finished, the frame is not raising.	- Bottom limit switch is adjusted wrong.	Bottom limit switch must be adjusted according to chapter ADJUSTING.
	- In hydraulic (pneumatic) ring is error. HYTOS (BOSCH) is not acting to frame uplift.	Function of magnetic valve must be checked, valve must be closed, voltage of clamps and inductor must be checked.
3. Electric motor and pump are without voltage. Between contactor and thermal protector is not voltage.	- Wrong contactor.	Replace contactor of engine.
4. The indicator of speed saw band is not functional.	- Sensor of speed is not adjusted.	Sensor of speed must be adjusted.
	- Defective display	The display must be changed.
	- Wrong sensor – diode of indicator speed is not light.	Sensor must be changed and adjusted.
5. Protector is switched off from engine hydraulic aggregate MA3 sometimes.	- Into hydraulic system is high working pressure.	Service engineer must reduce the pressure in hydraulic system.
6. Hydraulic aggregate is switched on but the saw arm or the main vice is not functional	- Wrong connection of electrical supply. The electrical phases are connected conversely.	The phases must be switched. Only service engineer can do this.
7. Cooling is not active	Lack of cooling agent.	Fill the tank with cooling agent.
	- Thermal relay is defective	Change the thermal relay
	- Input hosepipe is broken or obstructed.	Check the cooling circuit and perhaps cleanse cooling system.
	- Cooling pump protection is defective	Check the protection of cooling pump if need change it.
	- Cooling pump is defective.	Replace the cooling pump.

5.3. Hydraulic problems

Problem	Possible causes	Repair
1. Hydrogenerator not supplying oil	• reverse rotation	Check the connections of each phase. Reconnect properly connection of the electrical phases.
	• shortage of oil in the tank	Add hydraulic oil
	• Oil viscosity does not correspond prescribed viscosity value	Change hydraulic oil.
	• Hydrogenerator malfunction	Call service
	• Wrong power supply connection.	Check the connections of each phase. Reconnect properly connection of the electrical phases.
2. Hydraulic oil contains bubbles	• Hydraulic circuit is not adequately deaerated	Make deaeration of hydraulic circuit.
	• Low oil level	Add hydraulic oil
	• the pump shaft seals damaged	Call service
3. Increased mechanical noise	• damaged joint drive	Call service
	• damaged or destroyed motor bearings	Call service
	• air intake	Check for leaks.
4. Low pressure, pump supplies oil	• problem in the safety valve	Wrong settings. Check the settings and adjust the safety valve.
	• pump wear	Call service
	• external or internal leakage	Call service
5. Hydrogenerator is seized	• damage by solid particles in oil	Make oil filtration, or call the service.
	• non-prescribed oil	Change hydraulic oil.
	• wrong type of oil	Change hydraulic oil.
	• exceeding the life of the pump	Call service
6. Overheating oil	• cooler malfunction	Check the cooler function or call service.
	• wear the pump, the energy is converted into heat	Call service
7. Hydraulic valve can not be readjusted	• electromagnet has no signal (voltage) - interrupted supply lines	Check again.
	• Electromagnet coil burnt	Replace coil – Call service.
	• spool valve sticking	Replace valve – Call service

Note:

Frequency Inverter
Do install the bandsaw machine at electrical Installation that corresponds recommended technical standards. We recommend to protect the machine using current protectores by characteristics U, able to compansate interchanges of rising current which escapes fromfilter of Frequency Inverter, so that additionalequipments to the machine will not be required than. We don't reccomend to protect a machine by a standard protector current, equipped by a smaller type under 100 mA. Standard used is 30 mA because of currnet escape in accordance of Frequency Inverters fitted on machine. Alternative soulutionshould be used currentprotector (FI) by sensitivity of 100 mA.

6. Schémata / Schemata / Schematics

6.1. Elektrické schema /Elektroschema /Wiring diagrams

Obsah / Table of contents / Inhalt

Strana Page Seite	Název strany Page name Seitenname	Datum Date Datum
/1	Úvodní strana / Start page / Startseite	10.07.2019
/2	Obsah / Table of contents / Inhaltsverzeichnis	15.10.2019
/3	Kusovník artiklů / Parts list / Artikelstückliste	10.07.2019
/3.a	Kusovník artiklů / Parts list / Artikelstückliste	15.10.2019
/3.b	Kusovník artiklů / Parts list / Artikelstückliste	15.10.2019
/3.c	Kusovník artiklů / Parts list / Artikelstückliste	15.10.2019
/3.d	Kusovník artiklů / Parts list / Artikelstückliste	15.10.2019
/3.e	Kusovník artiklů / Parts list / Artikelstückliste	15.10.2019
/3.f	Kusovník artiklů / Parts list / Artikelstückliste	15.10.2019
/4	Rozmístění prvků v rozvaděči R1 / Placement of elements in enclosure R1 / Platzierung der Elemente im Schaltschrank R1	10.07.2019
/5	Ovládací panel OP1 / Control panel OP1 / Bedienpult OP1	25.03.2019
/6	Silová část / Power part / Feld partie	10.07.2019
/7	Silová část / Power part / Feld partie	17.07.2019
/8	Pohon pilového pásu / Saw belt drive / Saw Riemenantrieb	15.10.2019
/9	Pohon podavače / Feeder drive / Feeder-Laufwerk	15.10.2019
/10	Deska zdroje / Power board / Netzgerat-Platte	15.10.2019
/11	Stykače motorů, M3 / Motor contactor, M3 / Motor-Schutzschalter, M3	10.07.2019
/12	Hydraulické ventily / Hydraulic valve / Hydroventil	27.03.2019
/13	Tlačítka ovládací panel OP1 / Button control panel OP1 / Taste Bedienpult OP1	27.03.2019
/14	Vstupy / Inputs / Eingänge	15.10.2019
/15	Vstupy / Inputs / Eingänge	15.10.2019
/16	Bezpečnostní relé / Safety relay / Sicherheitsrelais	10.07.2019
/17	Řidicí systém / Control system / Steuersystem	13.08.2019
/18	Příslušenství / Accessories / Zubehör	10.07.2019

Kusovník artiklů / Parts list / Stückliste

Označení přístroje Device identification Geräteidentifikation	Typ přístroje Device description Gerätebeschreibung	Objednací číslo Type number Typennummer	Výrobce Manufacturer Hersteller	Skladové číslo Part number Lagernummer	Množství Quantity Menge	Umístění Location Stelle
-SA1	SPÍNAČ ČERNÝ 3 polohy - Harmony Switch black 3 positions - Harmony Schalter schwarz 3 Positionen - Harmony	ZB5-AD3	TELEMECANIQUE	91.060.024	1	/13.5
-ZD1	Napájecí zdroj - 15VAC/24VDC; 20VAC/28VDC Power supply unit - 15VAC/24VDC; 20VAC/28VDC Netzteil - 15VAC/24VDC; 20VAC/28VDC	ZDR-03	Bomar	265.915	1	/10.3
-BM1	Bezpečnostní relé 24VDC, 3NO Safety relay 24VDC, 3NO Sicherheitsrelais 24VDC, 3NO	BT50	ABB	91.051.063	1	/16.6
-CU1	Klávesnice - fóliová Touch-sensitive keyboard Folientastatur	31.R230-207	AKI ELECTRONIC,spol.s.r.o.	31.R230-207	1	/17.0
-SN2	Rotační enkodér 24V/5V Rotary encoder 24V/5V Drehcodierer 24V/5V	DHB500	Bomar	252.050	1	/14.8
-CU1	Řídící obvod Control circuit Die Steuerschaltung	PRO-5.xU	Bomar	91.995.226	1	/17.0
-FU1	Pojistka trubičková - 500mA/250V, pomalá, 5x20 Tube fuse - 500mA/250V, slow, 5x20 Rohrsicherung - 500 mA / 250 V, langsam, 5x20	T500mA/250V	ESKA	91.230.011	1	/10.5
-FU3	Pojistka trubičková - 6,3A/250V, pomalá, 5x20 Tube fuse - 6,3A/250V, slow, 5x20 Rohrsicherung - T6,3A / 250V, langsam, 5x20	T6,3A/250V	ESKA	91.230.002	1	/10.5
-FU4	Pojistka trubičková - 500mA/250V, pomalá, 5x20 Tube fuse - 500mA/250V, slow, 5x20 Rohrsicherung - 500 mA / 250 V, langsam, 5x20	T500mA/250V	ESKA	91.230.011	1	/7.2
-FU6	Pojistka trubičková - 500mA/250V, pomalá, 5x20 Tube fuse - 500mA/250V, slow, 5x20 Rohrsicherung - 500 mA / 250 V, langsam, 5x20	T500mA/250V	ESKA	91.230.011	1	/18.6
-RP1	Potenciometr 4k7 Potenciometer 4k7 Potentiometer 4k7	TP195 4k7/N20A	Elektronické součástky CZ, a.s	91.283.015	1	/8.5
-RP1	Hlavice potenciometru - 24mm Head of potentiometer 24mm Leiter Potentiometer 24mm	S8877 BLK	GES-ELECTRONICS, a.s.	91.060.063	1	/8.5

The manufacturer reserves right to use an equivalent replacement device.

2

Kusovník artiklů / Parts list / Stückliste

Označení přístroje Device identification Geräteidentifikation	Typ přístroje Device description Gerätebeschreibung	Objednací číslo Type number Typennummer	Výrobce Manufacturer Hersteller	Skladové číslo Part number Lagernummer	Množství Quantity Menge	Umístění Location Stelle
-HV1	Dioda 800V 3A Diode 800V 3A Diode 800V 3A	BY399 DO201	GM-electronics	91.280.009	1	/12.1
-HV2	Dioda 800V 3A Diode 800V 3A Diode 800V 3A	BY399 DO201	GM-electronics	91.280.009	1	/12.2
-HV3A	Dioda 800V 3A Diode 800V 3A Diode 800V 3A	BY399 DO201	GM-electronics	91.280.009	1	/12.4
-HV3B	Dioda 800V 3A Diode 800V 3A Diode 800V 3A	BY399 DO201	GM-electronics	91.280.009	1	/12.5
-HV4	Dioda 800V 3A Diode 800V 3A Diode 800V 3A	BY399 DO201	GM-electronics	91.280.009	1	/12.6
-HA1	Laser Laser Laser	Laser 24AC/DC	HOFMAN SYSTEMS s.r.o.	91.100.109	1	/18.3
-LQ1	Reflexní světelná závora Retro-reflective sensor Reflexlichtschranke	IFM.O6P203	IFM electronic	91.401.032	1	/14.6
-LQ1	Odrazka Reflector Reflektor	IFM.E20452	IFM electronic	91.175.015	1	/14.6
-RCF1	Filtr RFC vývodový Efferent RFC filter Ableitenden RFC Filter	FBOPR1624	Ing. Miroslav Vlček	91.041.015	1	/7.5
-RCF11	Filtr RFC vývodový Efferent RFC filter Ableitenden RFC Filter	FBOPR1624	Ing. Miroslav Vlček	91.041.015	1	/6.6
-RCF12	Filtr RFC vývodový Efferent RFC filter Ableitenden RFC Filter	FBOPR1624	Ing. Miroslav Vlček	91.041.015	1	/6.7
-FA1	Motorový spouštěč - 1.6A Motor starter - 1.6A Motorstarter - 1.6A	MS116-1,6	ABB	91.045.020	1	/7.6

The manufacturer reserves right to use an equivalent replacement device.

3

Kusovník artiklů / Parts list / Stückliste

Označení přístroje Device identification Geräteidentifikation	Typ přístroje Device description Gerätebeschreibung	Objednací číslo Type number Typennummer	Výrobce Manufacturer Hersteller	Skladové číslo Part number Lagernummer	Množství Quantity Menge	Umístění Location Stelle
-FA1	Pomocné kontakty - 1xNO+1xNC Auxiliary contacts - 1xNO+1xNC Hilfskontakte - 1xNO+1xNC	HKF1-11	ABB	91.046.002	1	/7.6
-FU2	Pojistka trubičková - 1A/250V, pomalá, 5x20 Tube fuse - 1A/250V, slow, 5x20 Rohrsicherung - 1A / 250V, langsam, 5x20	T1A/250V	ESKA	91.230.031	1	/10.5
-FU4	Svorka pojistková Fuse terminal Sicherungsklemme	WK4/THSi5U	WIELAND	91.251.102	1	/7.2
-FU5	Pojistka trubičková - 200mA/250V, pomalá, 5x20 Tube fuse - 200mA/250V, slow, 5x20 Rohrsicherung - 160mA / 250V, langsam, 5x20	T200mA/250V	ESKA	91.230.037	1	/18.3
-KM1	Ministykač 4kW/400V Minicontactor 4kW/400V Minischutz 4kW/400V	B6S-30-01-1.7-71	ABB	91.040.049	1	/11.3
-KM11	Ministykač 4kW/400V Minicontactor 4kW/400V Minischutz 4kW/400V	B6S-30-01-1.7-71	ABB	91.040.049	1	/16.7
-KM12	Ministykač 4kW/400V Minicontactor 4kW/400V Minischutz 4kW/400V	B6S-30-01-1.7-71	ABB	91.040.049	1	/16.8
-PA1	Pojistkový odpínač pro válcové vložky - 3P Switch fuse for the cylinder inserts - 3P Schalter Sicherung für den Zylindereinsätze - 3P	E 93/32	ABB	91.241.014	1	/8.1
-PA2	Pojistkový odpínač pro válcové vložky - 3P Switch fuse for the cylinder inserts - 3P Schalter Sicherung für den Zylindereinsätze - 3P	E 93/32	ABB	91.241.014	1	/9.1
-PA3	Pojistkový odpojovač E-90 - 2P Fuse disconnector E-90 - 2P Sicherungstrenner E90 - 2P	E 92/32	ABB	91.241.013	1	/10.1
-RE1	Paticové relé CR-P Plug-in relay CR-P Stecken Sie in Relais CR-P	CR-P024DC2	ABB	91.051.049	1	/11.1
-RE1	Patice pro relé Relay socket Relaissockel	CR-PSS	ABB	91.051.048	1	/11.1

The manufacturer reserves right to use an equivalent replacement device.

3.a

Kusovník artiklů / Parts list / Stückliste

Označení přístroje Device identification Geräteidentifikation	Typ přístroje Device description Gerätebeschreibung	Objednací číslo Type number Typennummer	Výrobce Manufacturer Hersteller	Skladové číslo Part number Lagernummer	Množství Quantity Menge	Umístění Location Stelle
-RE2	Paticové relé CR-P Plug-in relay CR-P Stecken Sie in Relais CR-P	CR-P024DC2	ABB	91.051.049	1	/11.4
-RE2	Patice pro relé Relay socket Relaissockel	CR-PSS	ABB	91.051.048	1	/11.4
-RE3	Paticové relé CR-P Plug-in relay CR-P Stecken Sie in Relais CR-P	CR-P024DC2	ABB	91.051.049	1	/11.6
-RE3	Patice pro relé Relay socket Relaissockel	CR-PSS	ABB	91.051.048	1	/11.6
-RP1	Svorka rychloupínací Fastconnect clamp Fast Connect Klemm	WAGO 224-112	WAGO	91.250.009	3	/8.5
-SA3	Hlavice tlačítka - černá Head button - black Kopftaste - schwarz	M22-D-S	EATON	91.060.035	1	/18.3
-SA3	Upevňovací adaptér + 1NO Attaching adapter + 1NO Montageadapter + 1NO	M22-AK10	EATON	91.061.021	1	/18.3
-SB1	Hlavice prosvětleného tlačítka zelená Green transparent switch Grün transparent Schalter	M22-DL-G	EATON	91.060.031	1	/13.2
-SB501	Total stop - hlavice + 2xNC Emergency-stop - button + 2xNC Not-Aus-Pilz - Taster + 2xNC	YW1B-V4E02R	IDEC	91.060.084	1	/16.4
-TR1	Toroidal transformer - 0-230-400V/20V/15V, 150VA Toroidal transformer - 0-230-400V/20V/15V, 150VA Ringkerntransformator - 0-230V-400V/20V/15V, 150VA	400V/230V/20V/15V 6A/2A 150VA	KARBAN s.r.o.	91.080.026	1	/10.2
-SQ50	Bezpečnostní koncový spínač - 2xNC Safety Limit Switch - 2x NC Sicherheitsendschalter - 2x NC	QKS8	KEDU	91.173.012	1	/16.4
-SQ51	Bezpečnostní koncový spínač - 2xNC Safety Limit Switch - 2x NC Sicherheitsendschalter - 2x NC	QKS8	KEDU	91.173.012	1	/16.2

The manufacturer reserves right to use an equivalent replacement device.

3.b

Kusovník artiklů / Parts list / Stückliste

Označení přístroje Device identification Geräteidentifikation	Typ přístroje Device description Gerätebeschreibung	Objednací číslo Type number Typennummer	Výrobce Manufacturer Hersteller	Skladové číslo Part number Lagernummer	Množství Quantity Menge	Umístění Location Stelle
-M4	Asynchronní motor - 0.37kW, 3x 230/400V, 50Hz Asynchronous motor - 0.37kW, 3x 230/400V, 50Hz Asynchronmotor - 0.37kW, 3x 230/400V, 50Hz	MDEMABI071-32C1C	Lenze	91.001.009	1	/9.1
-PA1	Pojistka válcová - 6A, 10x38, rychlá Tube fuse - 6A, 10x38, fast Rohrsicherung - 6A, 10x38, schnell	PV10 6A gG	OEZ	91.231.002	3	/8.1
-PA2	Pojistka válcová - 2A, 10x38, pomalá Tube fuse - 2A, 10x38, slow Rohrsicherung - 2A, 10x38, langsam	PV10 2A gG	OEZ	91.230.034	3	/9.1
-PA3	Pojistka válcová - 2A, 10x38, pomalá Tube fuse - 2A, 10x38, slow Rohrsicherung - 2A, 10x38, langsam	PV10 2A gG	OEZ	91.230.034	3	/10.1
-SQ1	Koncový spínač - 1NC+1NO Limit switch - 1NC+1NO Endschalter - 1NC+1NO	D4N-4A31	OMRON	91.173.007	1	/15.1
-SQ2	Koncový spínač - 1NC+1NO Limit switch - 1NC+1NO Endschalter - 1NC+1NO	D4N-4A31	OMRON	91.173.007	1	/15.3
-SQ3	Koncový spínač - 1NO + 1NC, kladka, pomalá akce Limit switch - 1NO + 1NC, pulley, slow action Endschalter - 1NO + 1NC, rolle, langsame Einwirkung	FR 605-M2	PIZZATO	91.173.009	1	/15.4
-SQ4	Koncový spínač - 1NO + 1NC Limit switch - 1NO + 1NC Endschalter - 1NO + 1NC	FR 555-M2	PIZZATO	91.173.018	1	/15.7
-SQ5	Koncový spínač - 1NO + 1NC, kladka, pomalá akce Limit switch - 1NO + 1NC, pulley, slow action Endschalter - 1NO + 1NC, rolle, langsame Einwirkung	FR 605-M2	PIZZATO	91.173.009	1	/15.9
-FM1	Frekvenční měnič - 1.5kW, 3x400VAC Frequency converter - 1.5kW, 3x400VAC Frequenzumrichter - 1,5kW, 3x400VAC	VFD015EL43A	DELTA ELECTRONICS, INC.	91.012.122	1	/8.1
-FM2	Frekvenční měnič - 0.4kW, 3x400VAC Frequency converter - 0.4kW, 3x400VAC Frequenzumrichter - 0.4kW, 3x400VAC	VFD004EL43A	DELTA ELECTRONICS, INC.	91.012.132	1	/9.1
-QS1	3 pólový odpínač, 16A Disconnector - 3P, 16A Trennschalter - 3P, 16A	SAP16-03-M1	SALZER YUEQING LEYI	91.170.028	1	/6.1

The manufacturer reserves right to use an equivalent replacement device.

3.c

Kusovník artiklů / Parts list / Stückliste

Označení přístroje Device identification Geräteidentifikation	Typ přístroje Device description Gerätebeschreibung	Objednací číslo Type number Typennummer	Výrobce Manufacturer Hersteller	Skladové číslo Part number Lagernummer	Množství Quantity Menge	Umístění Location Stelle
-M1	Čerpadlo chlazení 50W Cooling pump 50W Kühlpumpe 50W	PA70-M	SAP srl	91.020.035	1	/7.2
-LQ1	Kabel M8 4pin 5m s úhlovým konektorem Cable M8 4pin 5m with angled connector Kabel M8 4pin 5m mit Winkelstecker	DOL-0804-W05M	SICK	91.142.103	1	/14.6
-M3	Asynchronní motor 1.5kW, 4P, 3x230/400V Asynchronous motor 1.5kW, 4P, 3x230/400V Asynchronmotor 1.5kW, 4P, 3x230/400V	TM2 90 4L B14-C140	SITI S.P.A.	91.001.217	1	/8.1
-FU1	Svorka pojistková Fuse terminal Sicherungsklemme	SKJ - 2.5D	SMS Technology	91.251.102	1	/10.5
-FU1	Svorka pojistková - koncové čelo Fuse terminal - termination Sicherungsklemme - Abschluss	SKJ - 2.5 RDG	SMS Technology	91.252.123	1	/10.5
-FU2	Svorka pojistková Fuse terminal Sicherungsklemme	SKJ - 2.5D	SMS Technology	91.251.102	1	/10.5
-FU3	Svorka pojistková Fuse terminal Sicherungsklemme	SKJ - 2.5D	SMS Technology	91.251.102	1	/10.5
-FU5	Svorka pojistková Fuse terminal Sicherungsklemme	SKJ - 2.5D	SMS Technology	91.251.102	1	/18.3
-FU6	Svorka pojistková Fuse terminal Sicherungsklemme	SKJ - 2.5D	SMS Technology	91.251.102	1	/18.6
-+OP1-SB510	Hlavice prosvětleného tlačítka žlutá The button head backlit yellow Der Knopf Kopf von hinten beleuchtet gelb	ZB5AW35	TELEMECANIQUE	91.060.023	1	/16.7
-SB2	Hlavice tlačítka černá Button black head Taste Mitesser	ZB5AA2	TELEMECANIQUE	91.060.013	1	/13.4
-XUSB	Konektor USB Connector USB Anschluss USB	CLIFF CP30110	CLIFF	91.141.110	1	/13.7

The manufacturer reserves right to use an equivalent replacement device.

3.d

Kusovník artiklů / Parts list / Stückliste

Označení přístroje Device identification Geräteidentifikation	Typ přístroje Device description Gerätebeschreibung	Objednací číslo Type number Typennummer	Výrobce Manufacturer Hersteller	Skladové číslo Part number Lagernummer	Množství Quantity Menge	Umístění Location Stelle
-XUSB	Kryt zásuvky USB USB socket cover Abdeckung der USB-Buchse	CLIFF CP30112	CLIFF	91.141.111	1	/13.7
-XUSB	Kabel USB 0,5 m USB cable 0.5 m USB-Kabel 0,5 m	GOOBAY 93016	GOOBAY	91.142.133	1	/13.7
-LP2	LED lampa LED lamp LED-Lampe	FL-T-24-1X3W	WIDECO	91.100.115	1	/18.6
-RCF0	Vstupní odrušovací filtr 10A Inout noise filter 10A Eingangsrauschfilter 10A	10EB15/50	WIDECOM TECHNOLOGY s.r.o.	91.041.061	1	/6.2
-M5	Ventilátor 24VDC, 154CFM Fan 24VDC, 154CFM Fan 24VDC, 154CFM	RDH1238 B2	Xinruilian Electronic Co.	91.015.126	1	/8.8

The manufacturer reserves right to use an equivalent replacement device.

3.e

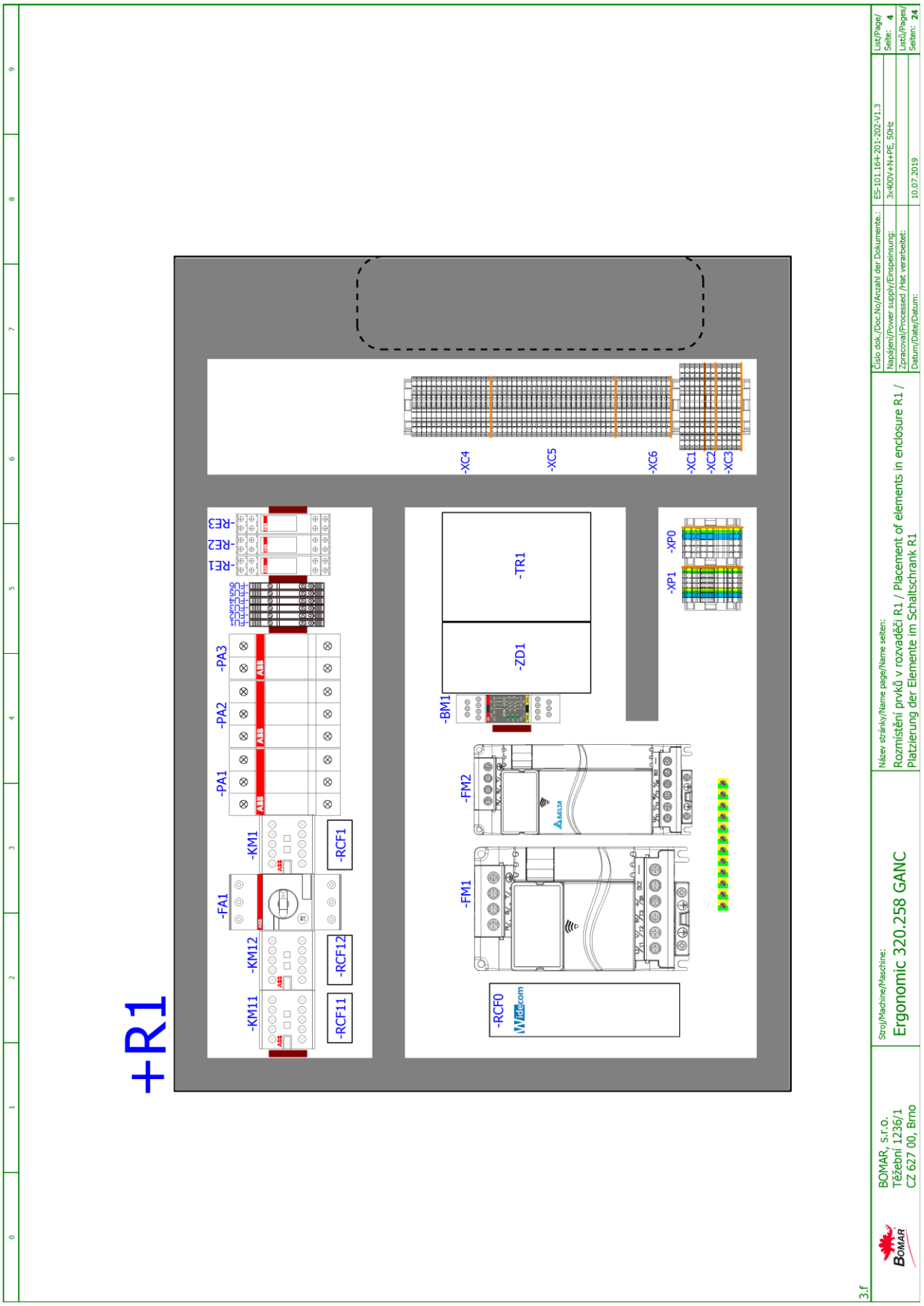
+R1
-KM11
-KM12
-FA1
-PA1
-PA2
-PA3
-KM1
-RCF11
-RCF12
-RCF1
-RF1
-RF2
-RF3
-RCF0
-FM1
-FM2
-BM1
-ZD1
-TR1
-XP1
-XP0
-XC4
-XC5
-XC6
-XC1
-XC2
-XC3
3.f
BOMAR, s.r.o.
Těžební 1236/1
CZ 627 00, Brno
Stroj/Machine/Maschine:
Ergonomic 320.258 GANC
Název stránky/Name page/Name seiten:
Rozmístění prvků v rozvaděči R1 / Placement of elements in enclosure R1 /
Platzierung der Elemente im Schaltschrank R1
Číslo dok./Doc.No/Anzahl der Dokumente.:
ES-101.164-201-202-V1.3
Napájení/Power supply/Einspeisung:
3x400V+N+PE, 50Hz
Zpracoval/Processed /Hat verarbeitet:
Datum/Date/Datum:
10.07.2019
List/Page/
Seite: 4
Listů/Pages/
Seiten: 24


+OP1
-SB501
-SA1
STOP
-RP1
-SB510
-HL510
START
-SB2
-SB1
-HL1
F1
F2
F3
F4
C1
C2
BOMAR, s.r.o.
Těžební 1236/1
CZ 627 00, Brno
Stroj/Machine/Maschine:
Ergonomic 320.258 GANC
Název stránky/Name page/Name seiten:
Ovládací panel OP1 / Control panel OP1 / Bedienpult OP1
Číslo dok./Doc.No/Anzahl der Dokumente:
ES-101.164+201-202-V1.3
Napájení/Power supply/Einspeisung:
3x400V+N+PE, 50Hz
Zpracoval/Processed /Hat verarbeitet:
Datum/Date/Datum:
25.03.2019
List/Page/
Seite: 5
Listů/Pages/
Seiten: 24

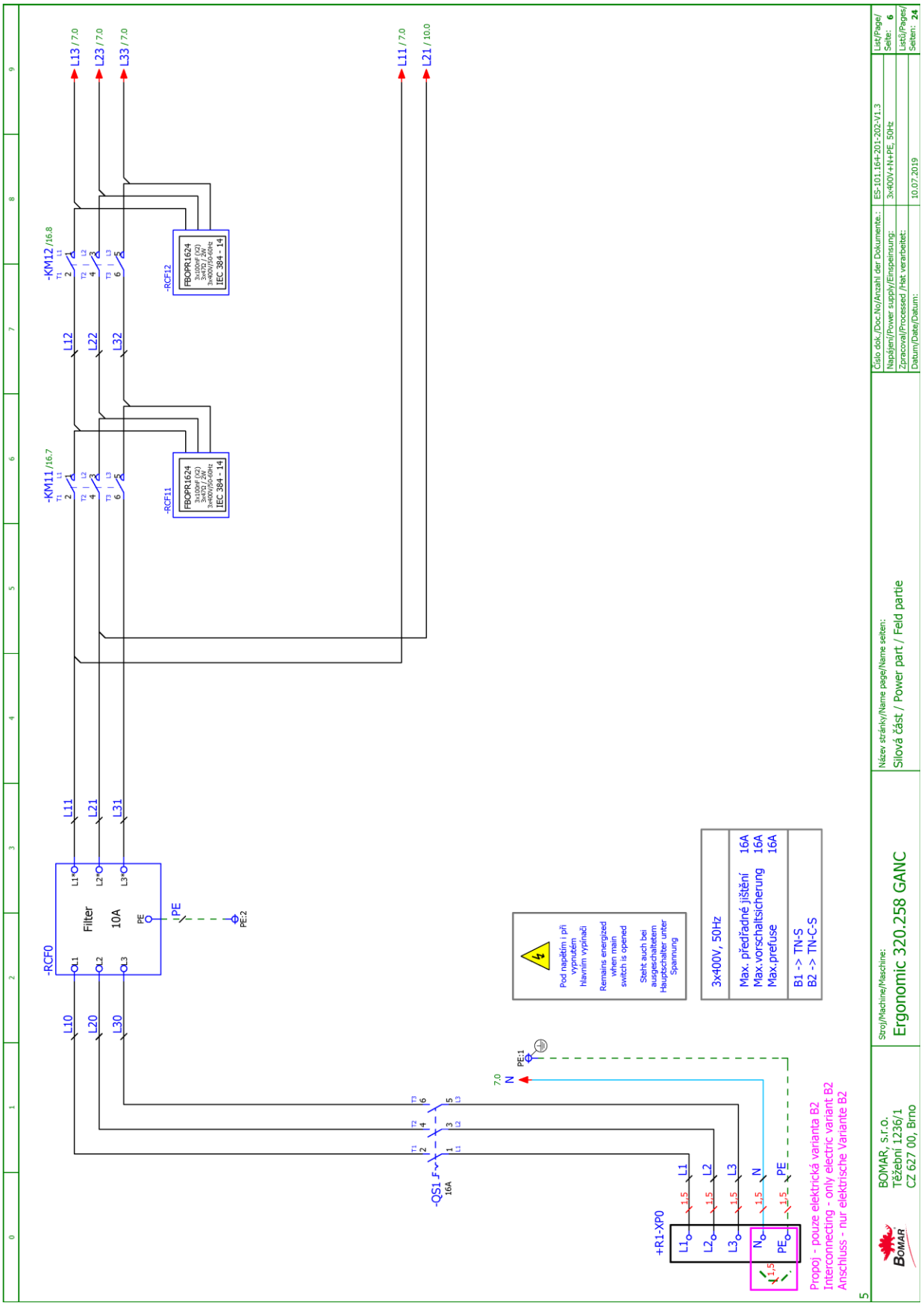
-RCF0
Filter
10A
PE
L1*
L2*
L3*
L1
L2
L3
L10
L20
L30
L11
L21
L31
PE
PE:2
-KM11 /16.7
-KM12 /16.8
T1 L1 2
T2 L2 4
T3 L3 6
L12
L22
L32
-RCF11
-RCF12
FBOPR1624
3x400V / 2A
3x400V/50-60Hz
IEC 384 - 14
L13 / 7.0
L23 / 7.0
L33 / 7.0
L11 / 7.0
L21 / 10.0
Pod napětím i při vypnutém hlavním vypínači
Remains energized when main switch is opened
Steht auch bei ausgeschaltetem Hauptschalter unter Spannung
3x400V, 50Hz
Max. předřadné jištění 16A
Max.vorschaltsicherung 16A
Max.prefuse 16A
B1 -> TN-S
B2 -> TN-C-S
PE:1
7.0
N
-QS1
16A
+R1-XP0
L1
L2
L3
N
PE
1,5
Propoj - pouze elektrická varianta B2
Interconnecting - only electric variant B2
Anschluss - nur elektrische Variante B2
5
BOMAR, s.r.o.
Těžební 1236/1
CZ 627 00, Brno
Stroj/Machine/Maschine:
Ergonomic 320.258 GANC
Název stránky/Name page/Name seiten:
Silová část / Power part / Feld partie
Číslo dok./Doc.No/Anzahl der Dokumente.:
ES-101.164-201-202-V1.3
Napájení/Power supply/Einspeisung:
3x400V+N+PE, 50Hz
Zpracoval/Processed /Hat verarbeitet:
Datum/Date/Datum:
10.07.2019
List/Page/
Seite: 6
Listů/Pages/
Seiten: 24

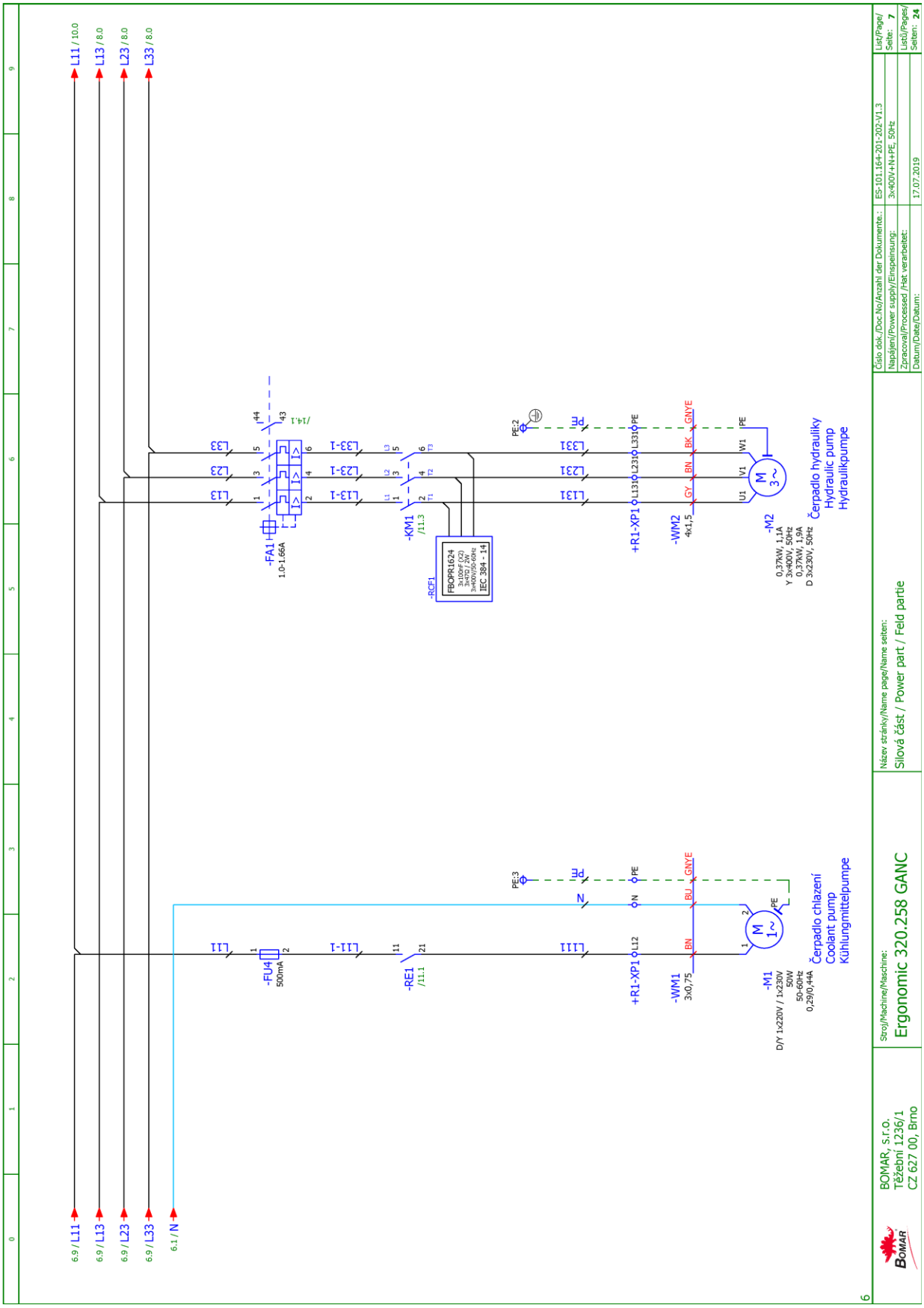
L11 / 10.0
L13 / 8.0
L23 / 8.0
L33 / 8.0
6.9 / L11
6.9 / L13
6.9 / L23
6.9 / L33
6.1 / N
-FA1
1,0-1,66A
/14.1
-KM1
/11.3
-RCF1
FBOPR1624
3x100F (X2)
3x4TU / 2W
3x400V/50-60Hz
IEC 384 - 14
PE-2
+R1-XP1
-WM2
4x1,5
-M2
0,37KW, 1,1A
Y 3x400V, 50Hz
0,37KW, 1,9A
D 3x230V, 50Hz
Čerpadlo hydrauliky
Hydraulic pump
Hydraulikpumpe
-FU4
500mA
-RE1
/11.1
PE-3
-WM1
3x0,75
-M1
D/Y 1x220V / 1x230V
50W
50-60Hz
0,29/0,44A
Čerpadlo chlazení
Coolant pump
Kühlungmittelpumpe
BOMAR, s.r.o.
Těžební 1236/1
CZ 627 00, Brno
Stroj/Machine/Maschine:
Ergonomic 320.258 GANC
Název stránky/Name page/Name seiten:
Silová část / Power part / Feld partie
Číslo dok./Doc.No/Anzahl der Dokumente:
ES-101.164+201-202-V1.3
Napájení/Power supply/Einspeisung:
3x400V+N+PE, 50Hz
Zpracoval/Processed /Hat verarbeitet:
Datum/Date/Datum:
17.07.2019
List/Page/
Seite: 7
Listů/Pages/
Seiten: 24
6

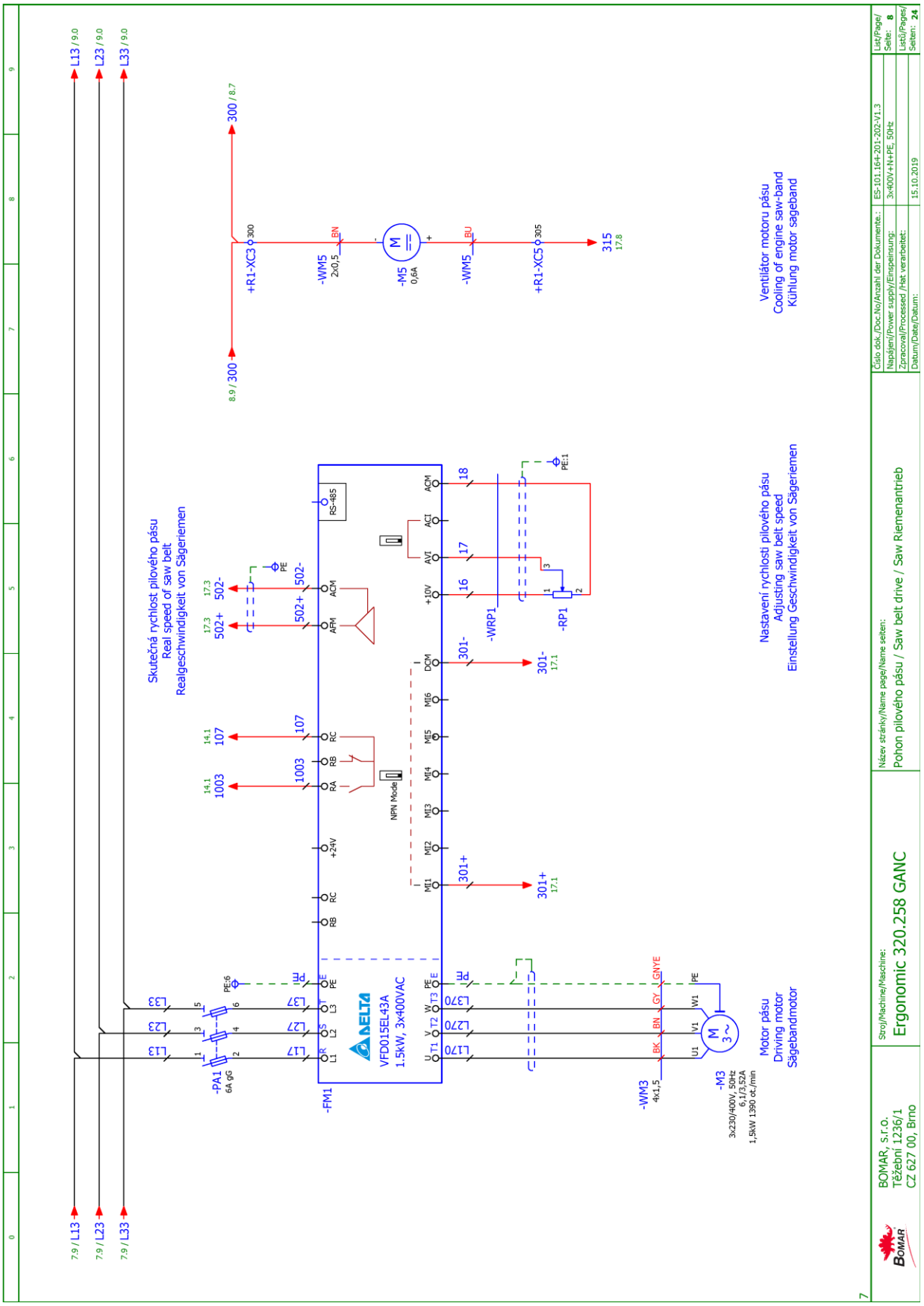
Skutečná rychlost pilového pásu
Real speed of saw belt
Realgeschwindigkeit von Sägeriemen
Ventilátor motoru pásu
Cooling of engine saw-band
Kühlung motor sageband
Nastavení rychlosti pilového pásu
Adjusting saw belt speed
Einstellung Geschwindigkeit von Sägeriemen
Motor pásu
Driving motor
Sägebandmotor
VFD015EL43A
1.5kW, 3x400VAC
-FM1
-PA1
6A gG
-M5
0,6A
-M3
3x230/400V, 50Hz
6,1/3,52A
1,5kW 1390 ot./min
-WM5
2x0,5
-WM3
4x1,5
-WRP1
-RP1
+R1-XC3
+R1-XC5
NPN Mode
RS-485
BOMAR, s.r.o.
Těžební 1236/1
CZ 627 00, Brno
Stroj/Machine/Maschine:
Ergonomic 320.258 GANC
Název stránky/Name page/Name seiten:
Pohon pilového pásu / Saw belt drive / Saw Riemenantrieb
Číslo dok./Doc.No/Anzahl der Dokumente.:
ES-101.164-201-202-V1.3
Napájení/Power supply/Einspeisung:
3x400V+N+PE, 50Hz
Zpracoval/Processed /Hat verarbeitet:
Datum/Date/Datum:
15.10.2019
List/Page/
Seite: 8
Listů/Pages/
Seiten: 24

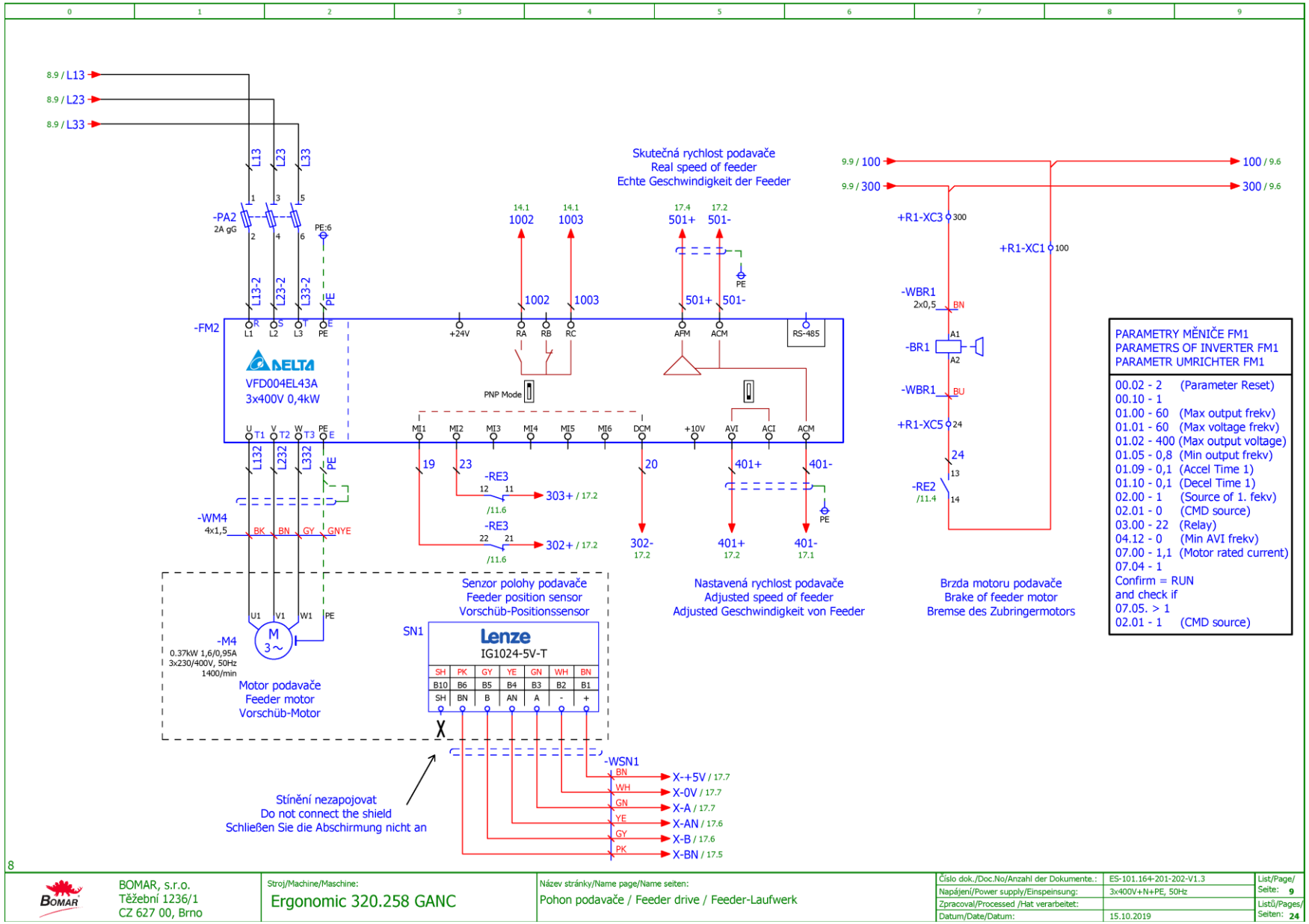

Schéma
Schemas
Schematics

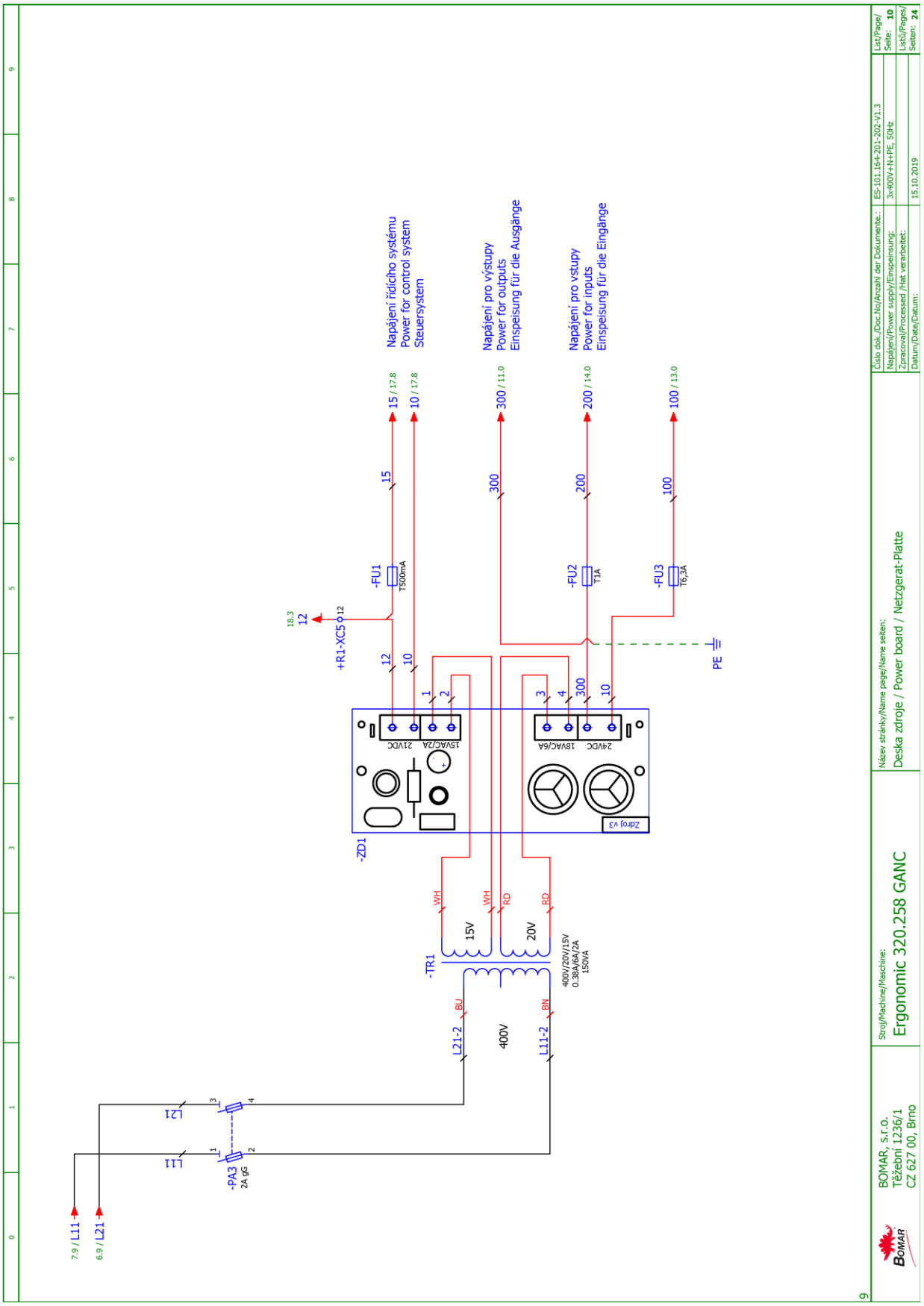
Napájení řídicího systému
Power for control system
Steuersystem
Napájení pro výstupy
Power for outputs
Einspeisung für die Ausgänge
Napájení pro vstupy
Power for inputs
Einspeisung für die Eingänge
15 / 17.8
10 / 17.8
300 / 11.0
200 / 14.0
100 / 13.0
-FU1
T500mA
-FU2
T1A
-FU3
T6,3A
+R1-XC5
18.3
12
PE
-ZD1
Zdroj v3
15V/AC/2A
21VDC
18V/AC/6A
24VDC
-TR1
15V
20V
400V/220V/15V
0.38A/6A/2A
150VA
400V
L21-2
L11-2
L21
L11
-PA3
2A gG
7.9 / L11
6.9 / L21
Název stránky/Name page/Name seiten:
Deska zdroje / Power board / Netzgerat-Platte
Stroj/Machine/Maschine:
Ergonomic 320.258 GANC
BOMAR, s.r.o.
Těžební 1236/1
CZ 627 00, Brno
Číslo dok./Doc.No/Anzahl der Dokumente.:
ES-101.164-201-202-V1.3
Napájení/Power supply/Einspeisung:
3x400V+N+PE, 50Hz
Zpracoval/Processed /Hat verarbeitet:
Datum/Date/Datum:
15.10.2019
List/Page/
Seite: 10
Listů/Pages/
Seiten: 24

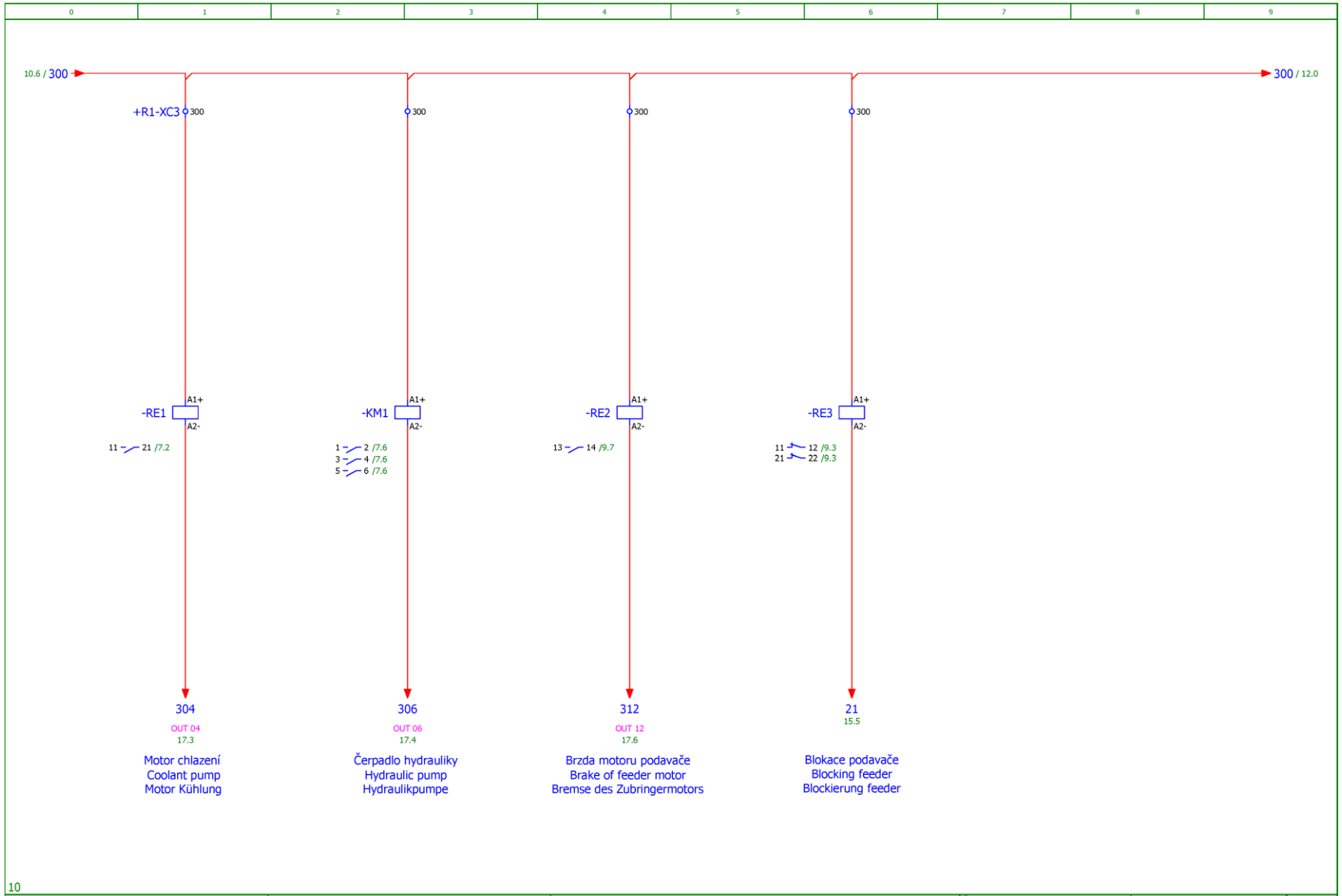

BOMAR, s.r.o. Těžební 1236/1 CZ 627 00, Brno	Stroj/Machine/Maschine: Ergonomic 320.258 GANC	Název stránky/Name page/Name seiten: Stykače motorů, M3 / Motor contactor, M3 / Motor-Schutzschalter, M3	Číslo dok./Doc.No/Anzahl der Dokumente.: ES-101.164-201-202-V1.3 Napájení/Power supply/Einspeisung: 3x400V+N+PE, 50Hz Zpracoval/Processed /Hat verarbeitet: Datum/Date/Datum: 10.07.2019	List/Page/Seite: 11 Listů/Pages/Seiten: 24

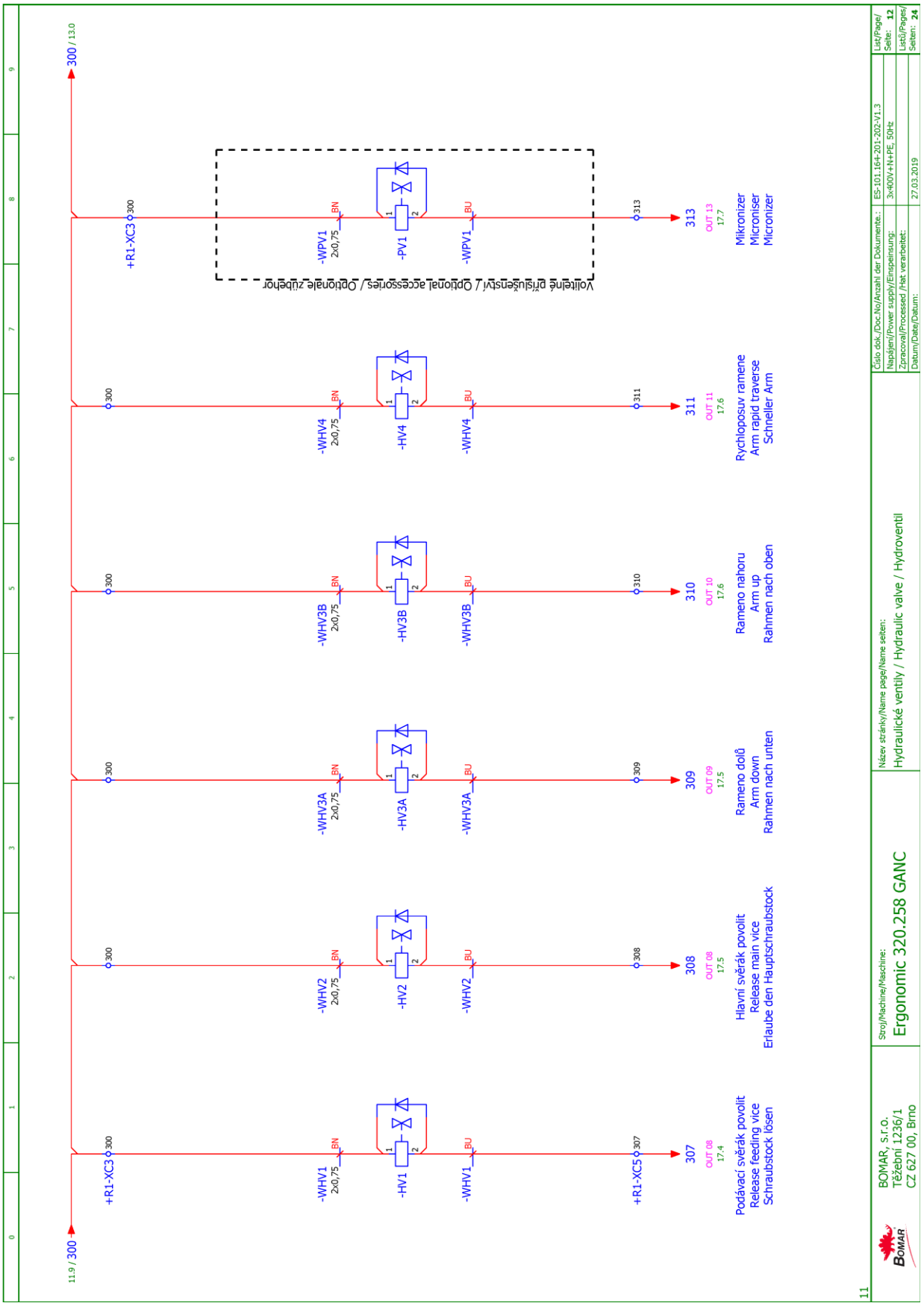
11.9 / 300
300 / 13.0
+R1-XC3
-WHV1
2x0,75
-HV1
-WHV1
+R1-XC5
307
OUT 08
17.4
Podávací svěrák povolit
Release feeding vice
Schraubstock lösen
-WHV2
-HV2
-WHV2
308
OUT 08
17.5
Hlavní svěrák povolit
Release main vice
Erlaube den Hauptschraubstock
-WHV3A
-HV3A
-WHV3A
309
OUT 09
17.5
Rameno dolů
Arm down
Rahmen nach unten
-WHV3B
-HV3B
-WHV3B
310
OUT 10
17.6
Rameno nahoru
Arm up
Rahmen nach oben
-WHV4
-HV4
-WHV4
311
OUT 11
17.6
Rychloposuv ramene
Arm rapid traverse
Schneller Arm
-WPV1
-PV1
-WPV1
313
OUT 13
17.7
Mikronizer
Micronizer
Micronizer
Volitelné příslušenství / Optional accessories / Optionale zubehör
BN
BU
BOMAR, s.r.o.
Těžební 1236/1
CZ 627 00, Brno
Stroj/Machine/Maschine:
Ergonomic 320.258 GANC
Název stránky/Name page/Name seiten:
Hydraulické ventily / Hydraulic valve / Hydroventil
Číslo dok./Doc.No/Anzahl der Dokumente.:
ES-101.164-201-202-V1.3
Napájení/Power supply/Einspeisung:
3x400V+N+PE, 50Hz
Zpracoval/Processed /Hat verarbeitet:
Datum/Date/Datum:
27.03.2019
List/Page/
Seite: 12
Listů/Pages/
Seiten: 24
11

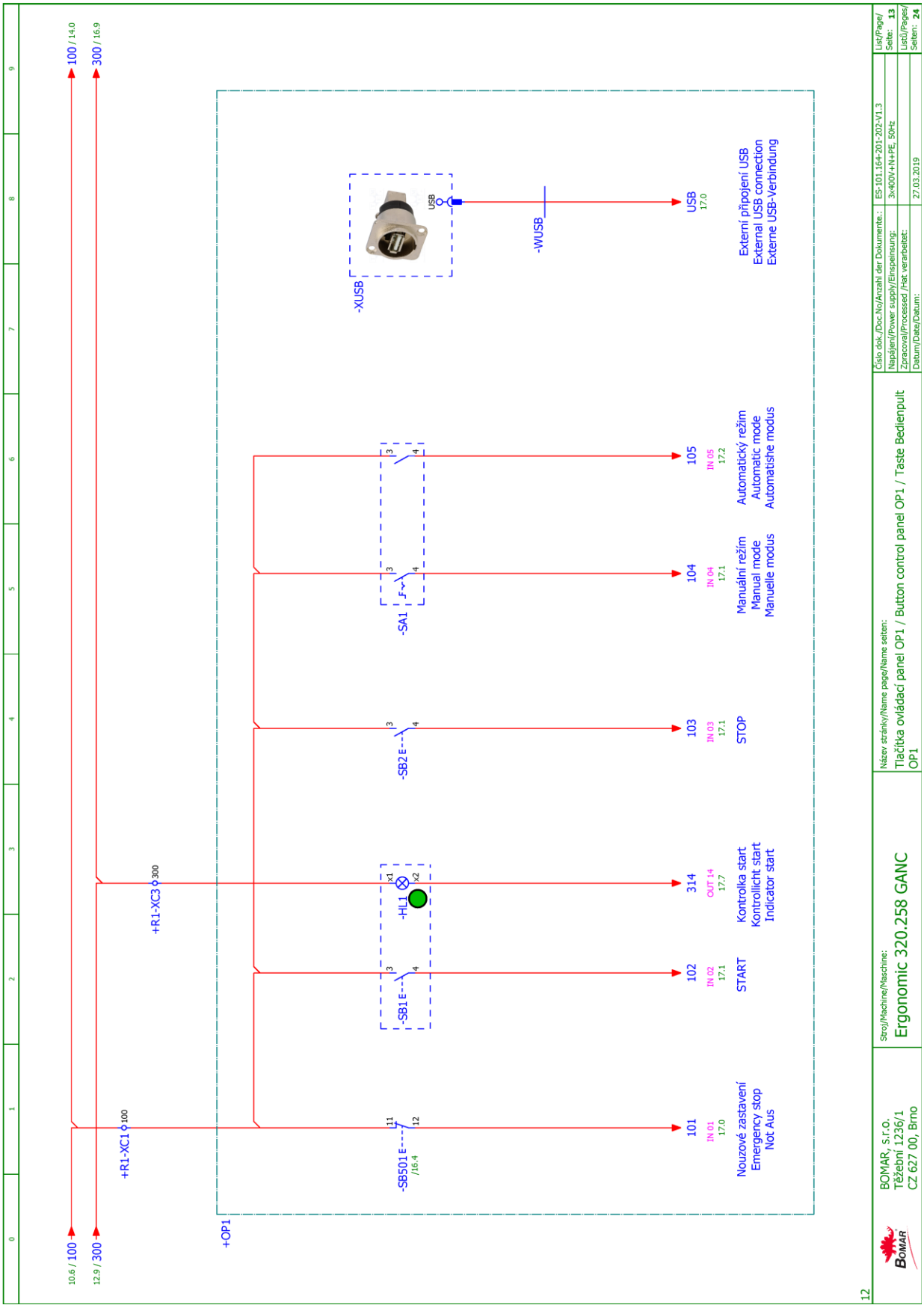

Schémata
Schemas
Schematics

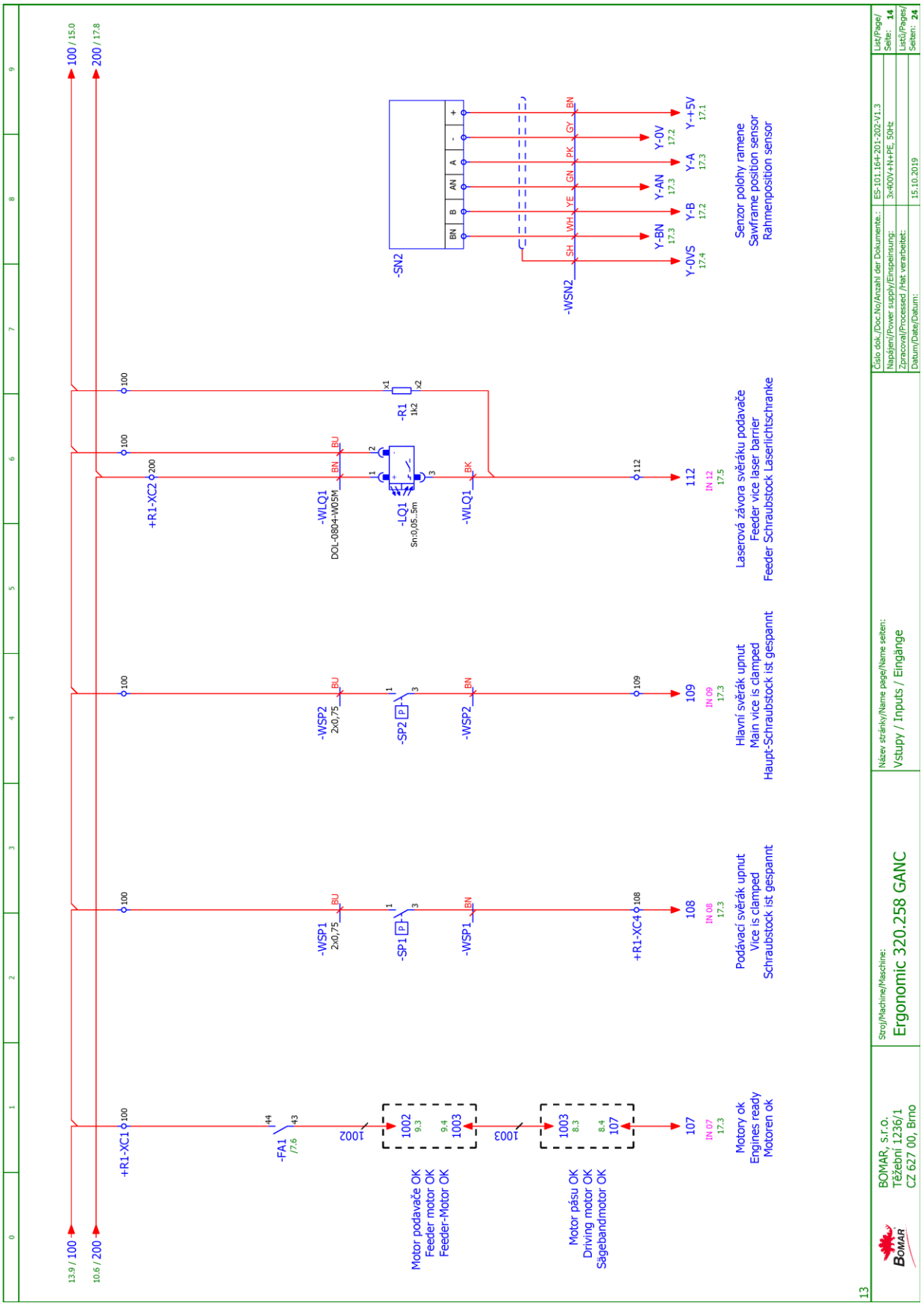
13.9 / 100
10.6 / 200
100 / 15.0
200 / 17.8
+R1-XC1
-FA1
/7.6
1002
Motor podavače OK
Feeder motor OK
Feeder-Motor OK
1003
Motor pásu OK
Driving motor OK
Sägebandmotor OK
107
IN 07
17.3
Motory ok
Engines ready
Motoren ok
-WSP1
2x0,75
-SP1
+R1-XC4
108
IN 08
Podávací svěrák upnut
Vice is clamped
Schraubstock ist gespannt
-WSP2
-SP2
109
IN 09
Hlavní svěrák upnut
Main vice is clamped
Haupt-Schraubstock ist gespannt
+R1-XC2
-WLQ1
DOL-0804-W05M
-LQ1
Sn:0,05..5m
-R1
1k2
112
IN 12
17.5
Laserová závora svěráku podavače
Feeder vice laser barrier
Feeder Schraubstock Laserlichtschranke
-SN2
-WSN2
Y-BN
Y-AN
Y-B
Y-A
Y-0V
Y-+5V
Y-0VS
Senzor polohy ramene
Sawframe position sensor
Rahmenposition sensor
BOMAR, s.r.o.
Těžební 1236/1
CZ 627 00, Brno
Stroj/Machine/Maschine:
Ergonomic 320.258 GANC
Název stránky/Name page/Name seiten:
Vstupy / Inputs / Eingänge
Číslo dok./Doc.No/Anzahl der Dokumente.:
ES-101.164-201-202-V1.3
Napájení/Power supply/Einspeisung:
3x400V+N+PE, 50Hz
Zpracoval/Processed /Hat verarbeitet:
Datum/Date/Datum:
15.10.2019
List/Page/
Seite: 14
Listů/Pages/
Seiten: 24
13

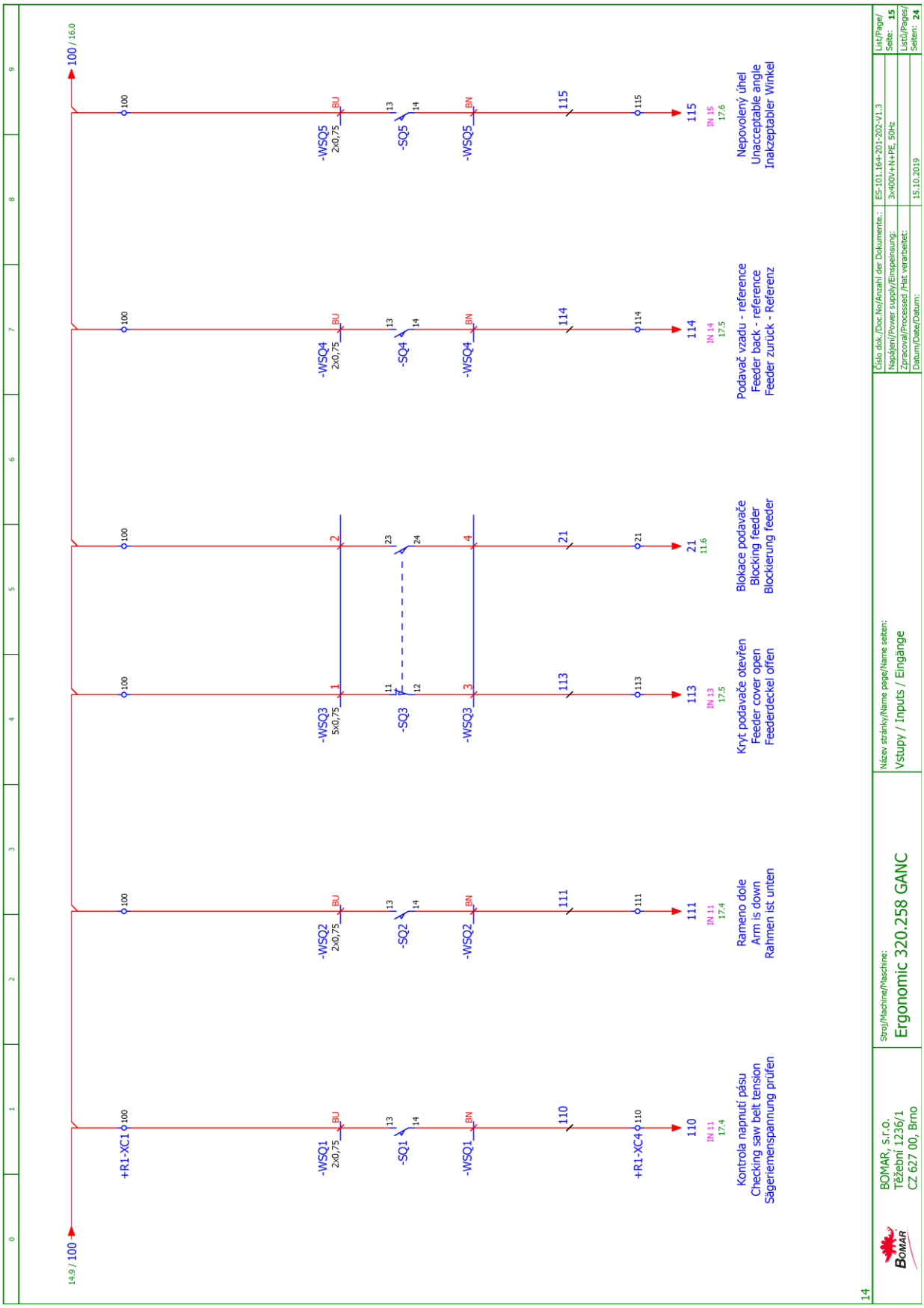
14.9 / 100
100 / 16.0
+R1-XC1
-WSQ1 2x0,75
-SQ1
-WSQ1
+R1-XC4
110
IN 11
17.4
Kontrola napnutí pásu
Checking saw belt tension
Sägeriemenspannung prüfen
-WSQ2 2x0,75
-SQ2
-WSQ2
111
IN 11
17.4
Rameno dole
Arm is down
Rahmen ist unten
-WSQ3 5x0,75
-SQ3
-WSQ3
113
IN 13
17.5
Kryt podavače otevřen
Feeder cover open
Feederdeckel offen
21
11.6
Blokace podavače
Blocking feeder
Blockierung feeder
-WSQ4 2x0,75
-SQ4
-WSQ4
114
IN 14
17.5
Podavač vzadu - reference
Feeder back - reference
Feeder zurück - Referenz
-WSQ5 2x0,75
-SQ5
-WSQ5
115
IN 15
17.6
Nepovolený úhel
Unacceptable angle
Inakzeptabler Winkel
BOMAR, s.r.o.
Těžební 1236/1
CZ 627 00, Brno
Stroj/Machine/Maschine:
Ergonomic 320.258 GANC
Název stránky/Name page/Name seiten:
Vstupy / Inputs / Eingänge
Číslo dok./Doc.No/Anzahl der Dokumente:
ES-101.164+201-202-V1.3
Napájení/Power supply/Einspeisung:
3x400V+N+PE, 50Hz
Zpracoval/Processed /Hat verarbeitet:
Datum/Date/Datum:
15.10.2019
List/Page/Seite: 15
Listů/Pages/Seiten: 24
14

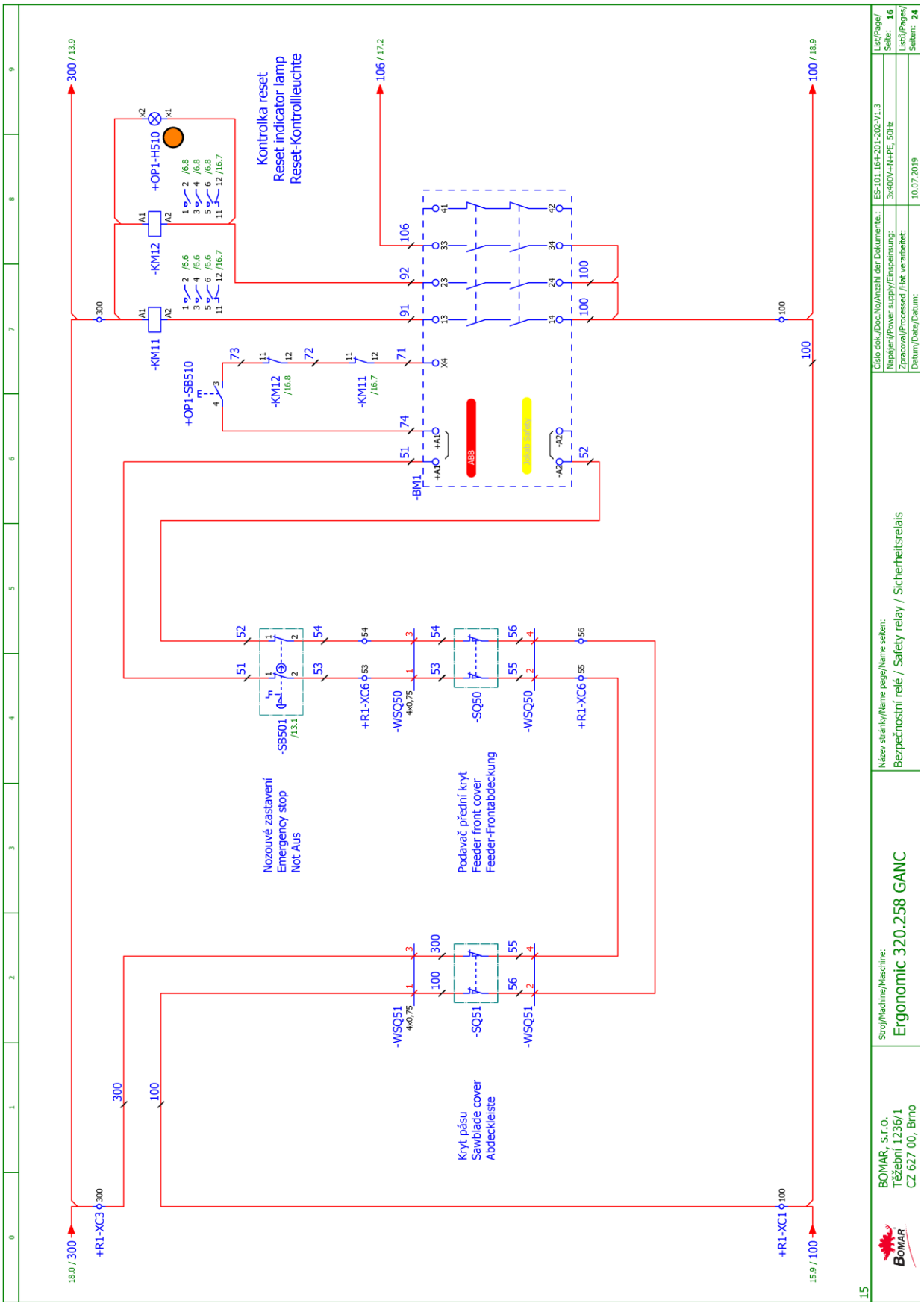
Kontrolka reset
Reset indicator lamp
Reset-Kontrollleuchte
Nozouvé zastavení
Emergency stop
Not Aus
Podavač přední kryt
Feeder front cover
Feeder-Frontabdeckung
Kryt pásu
Sawblade cover
Abdeckleiste
Název stránky/Name page/Name seiten:
Bezpečnostní relé / Safety relay / Sicherheitsrelais
Stroj/Machine/Maschine:
Ergonomic 320.258 GANC
BOMAR, s.r.o.
Těžební 1236/1
CZ 627 00, Brno
ES-101.164-201-202-V1.3
3x400V+N+PE, 50Hz
10.07.2019

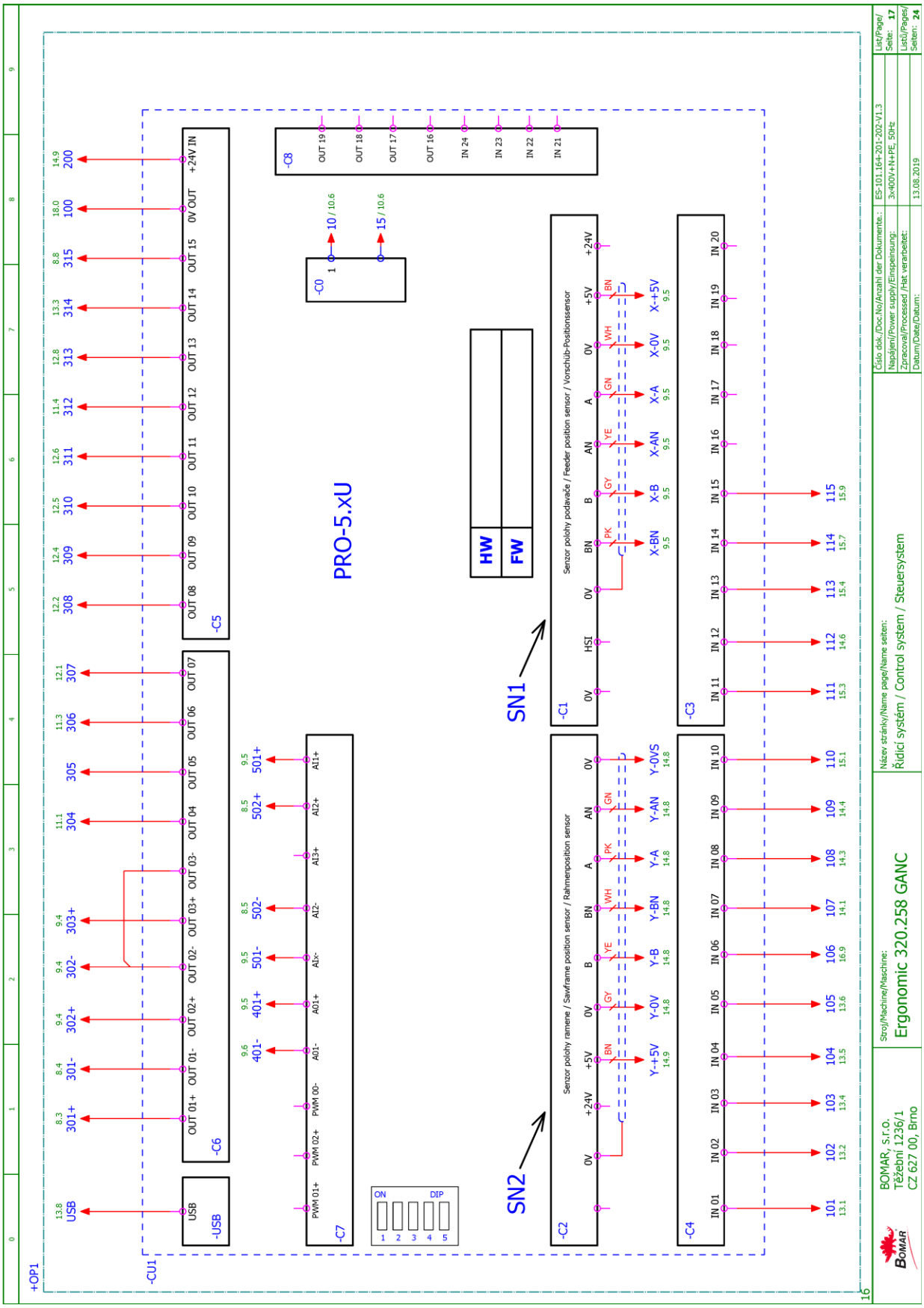
+OP1
-CU1
PRO-5.xU
HW
FW
SN1
SN2
-USB
-C6
-C5
-C7
-C8
-C0
-C1
-C2
-C3
-C4
Senzor polohy podavače / Feeder position sensor / Vorschub-Positionssensor
Senzor polohy rámeře / Sawframe position sensor / Rahmenposition sensor
ON
DIP
BOMAR, s.r.o.
Těžební 1236/1
CZ 627 00, Brno
Stroj/Machine/Maschine:
Ergonomic 320.258 GANC
Název stránky/Name page/Name seiten:
Řídicí systém / Control system / Steuersystem
Číslo dok./Doc.No/Anzahl der Dokumente:
ES-101.164+201-202-V1.3
Napájení/Power supply/Einspeisung:
3x400V+N+PE, 50Hz
Zpracoval/Processed /Hat verarbeitet:
Datum/Date/Datum:
13.08.2019
List/Page/Seite: 17
Listů/Pages/Seiten: 24
16

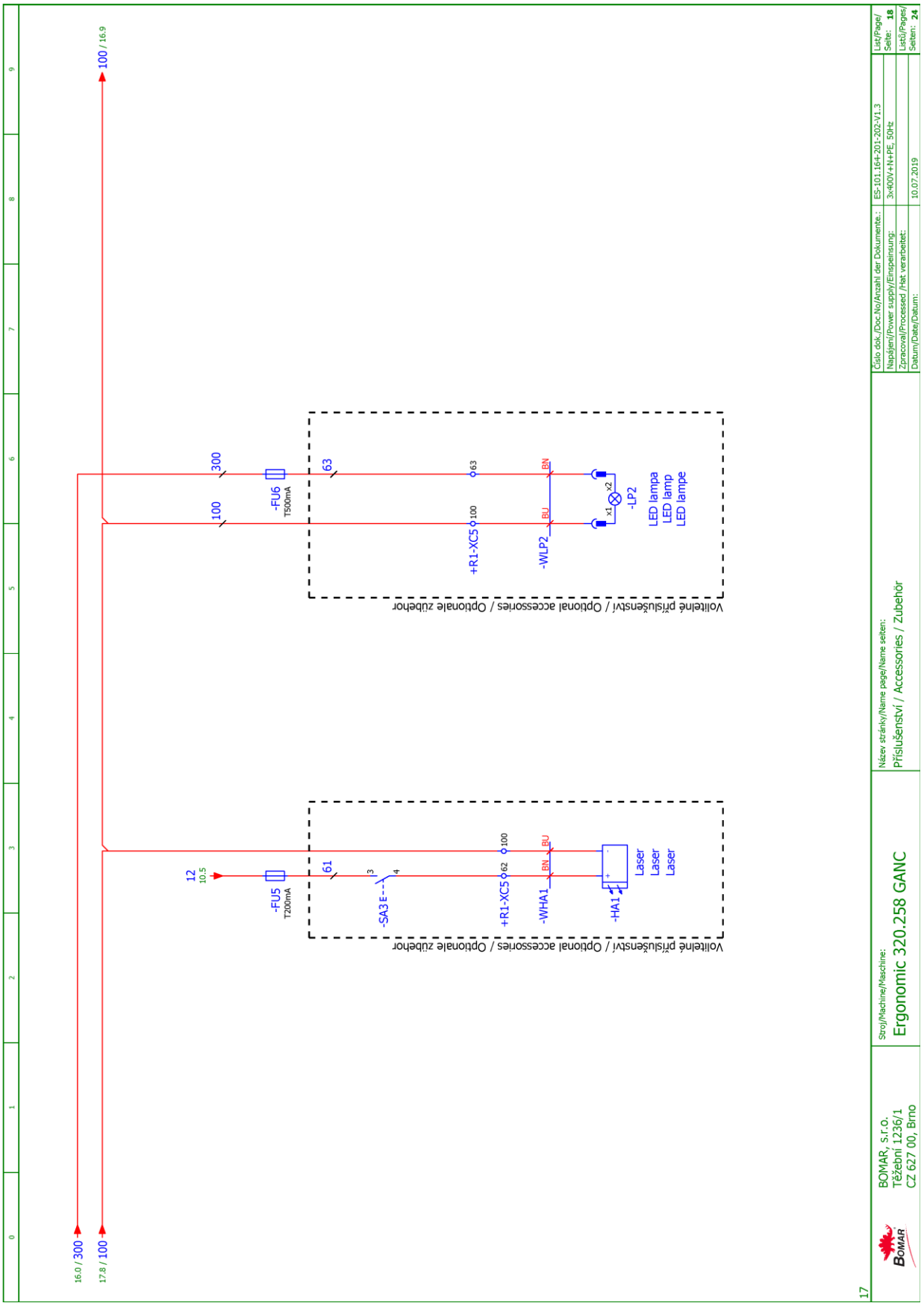
16.0 / 300
17.8 / 100
100 / 16.9
12
10,5
-FU5
T200mA
61
-SA3
+R1-XC5
-WHA1
-HA1
Laser
Laser
Laser
Volitelné příslušenství / Optional accessories / Optionale zubehör
300
100
-FU6
T500mA
63
+R1-XC5
-WLP2
-LP2
LED lampa
LED lamp
LED lampe
Volitelné příslušenství / Optional accessories / Optionale zubehör
BOMAR, s.r.o.
Těžební 1236/1
CZ 627 00, Brno
Stroj/Machine/Maschine:
Ergonomic 320.258 GANC
Název stránky/Name page/Name seiten:
Příslušenství / Accessories / Zubehör
Číslo dok./Doc.No/Anzahl der Dokumente.:
ES-101.164-201-202-V1.3
Napájení/Power supply/Einspeisung:
3x400V+N+PE, 50Hz
Zpracoval/Processed /Hat verarbeitet:
Datum/Date/Datum:
10.07.2019
List/Page/
Seite: 18
Listů/Pages/
Seiten: 24
17

6.2. Hydraulické schéma /Hydraulisches Schéma / Hydraulic diagram

Redukční ventily OPTION / Druckreduzierventile OPTION / Pressure reducing valves OPTION

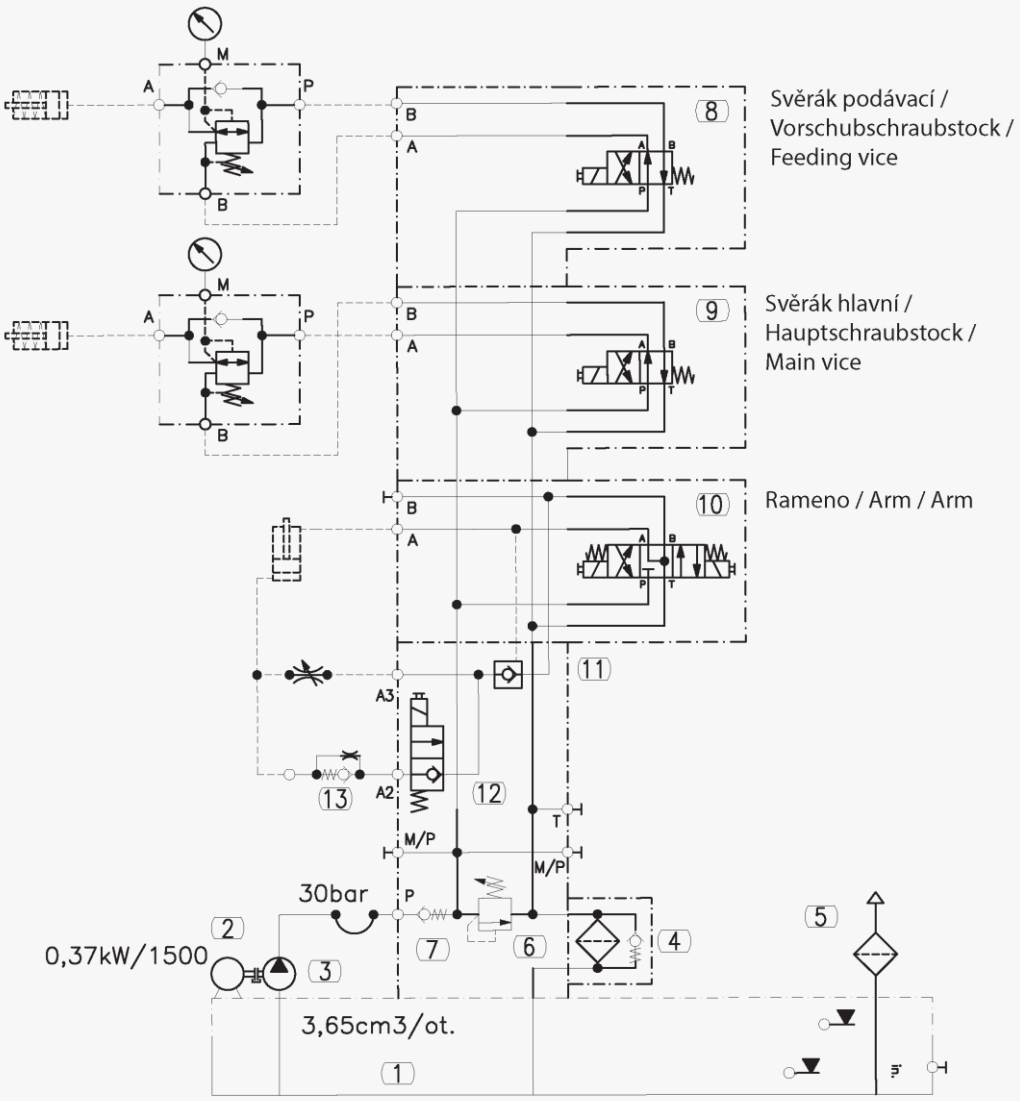

Typ / Type / Type	
	Ergonomic 320.258 GANC
Neuvedené světlosti / Unerwähnt Lichtbreite / Unlisted inside diameters	JS6
Výstupní šroubení / Ausgangschraubung / Output screewing	G1/4"

P/Pmax	30/30 bar
Q	4,9 dm³/min
n	1500 rpm
P	0,37 kW

Číslo materiálu: S001 770 2
21.1.2020 FMV

Poz.	Název položky	Typ	ks
Pos.	**Bezeichnung**	**Typ**	**Menge**
Pos.	**Item**	**Type**	**Pcs.**
1	Nádrž / Behälter / Tank	TM 13,5/S, 13 l	1
2	Elektromotor / Elektromotor / Electromotor	EM 71 0,25kW/3 1500 RPM B35	1
3	Zubové čerpadlo / Zahnradpumpe e / Gear pump GR1	10A2,5X053G, 2,5 cm3/ot	
4	Zpětný filtr / Rückschlagventi / Reserve throttle valve	FILTRON (FI OP643/4)	1
5	Nalévací zátka / Einfüllspund / Fill stopper	SFP.40-1+F FIL	1
6	Přepouštěcí ventil / Bypaßventil / By pass valve	MO-020/10	1
7	Ventil zpětný / Gegendruckventil / Clack-valve	CVG 14	1
8	Rozvaděč/ Verteiler/ Distributor	DVE03-S04-B4-C24/20/T1-M1	1
9	Rozvaděč/ Verteiler/ Distributor	DVE03-S12-B1-C24/20/T1-M1	1
10	Rozvaděč/ Verteiler/ Distributor	DVE03-S12-B3-C24/20/T1-M1	1
11	Zámek/ Lock/ Schloss	PC08-30-0-N	1
12	Sedlový rozváděč / Globe distributor / Geradsitzverteiler NC	SV08-20-0-N-24EG	1
13	Škrticí ventil / Droßelventil / Throttle-valve	VJS3-06-005-G1-150	1

7. Výkresy sestav pro objednání náhradních dílů/ Zeichnungen für Bestellung der Ersatzteile / Drawing assemblies for spare parts order

- Při objednávání náhradních dílů vždy uvádějte: typ stroje (např. Ergonomic 320.258 GANC), výrobní číslo (např. 125) a rok výroby (např. 1999).
-
- In die Bestellung der Ersatzteile führen Sie immer an: Maschinentyp (z. B. Ergonomic 320.258 GANC), Serien Nr. (z. B. 125) und Baujahr (z. B. 1999).
-
- For spare parts order, you must always to allege: type of machine (for example Ergonomic 320.258 GANC), serial number (for example 125, see cover page) and year of construction (for example 1999).

7.1. Ergonomic 320.258 GANC

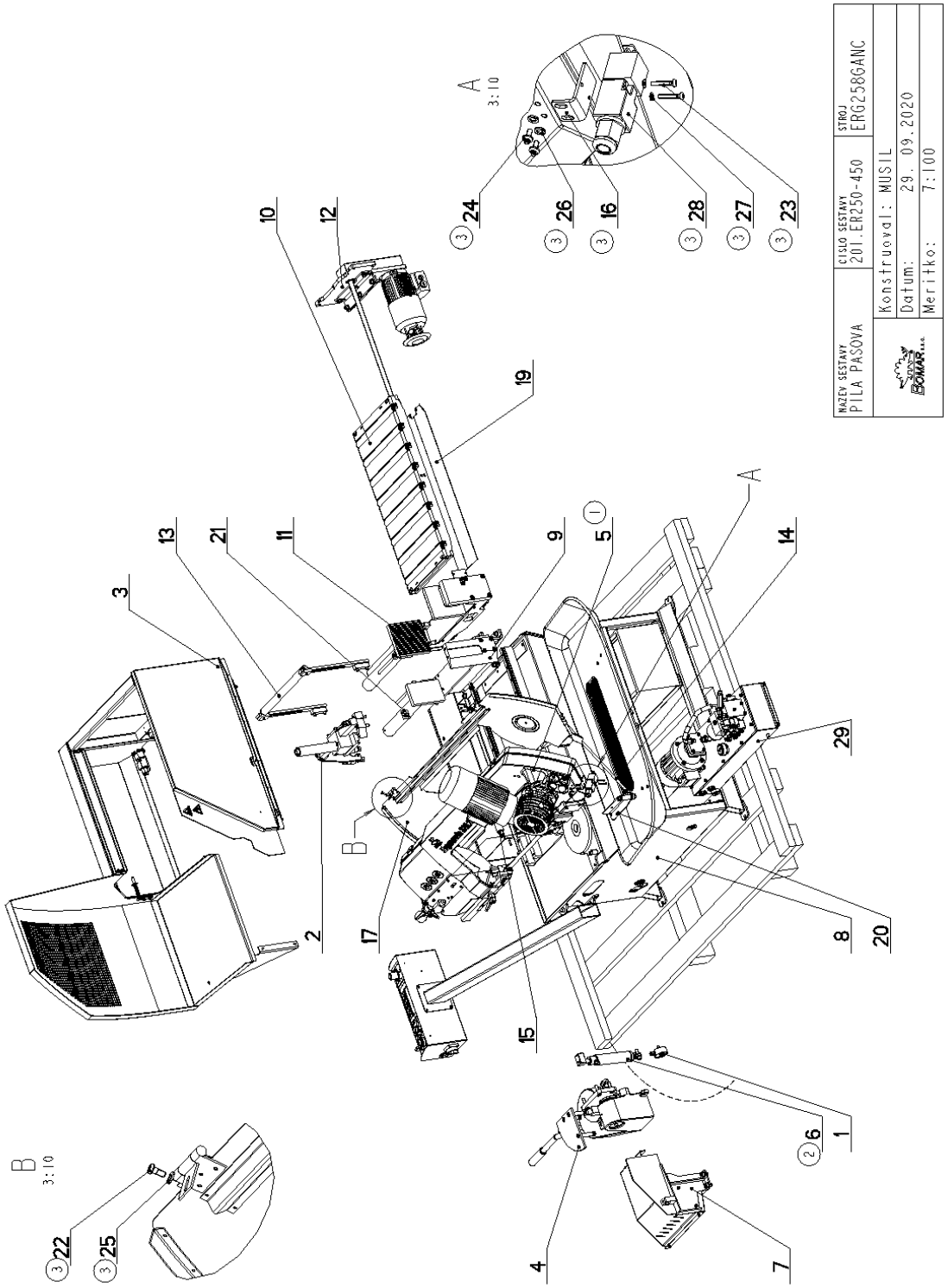

Cislo Sestavy	Ver.	Nazev sestavy
201.ER250-450	3	PILA PASOVA/BAND SAW/BANDSÄGE

Poz.	Objednaci cislo	Ver.	Nazev polozky	Rozmer	Ks
1	201.0614-200	1	ODMEROVANI / MEASURING / GEHRUNGSMESSUNG		1
2	201.ER2514-330	0	UPINANI HORNI / TOP CLAM / SPANNVORRICHTUNG OBEN		1
3	201.ER2518-450	2	KRYTY / COVERS / ABDECKUNGEN		1
4	201.ER252-450	1	KONZOLA OTOCNA / TURNABLE CONSOL / DREHKONSOLE		1
5	201.ER254-700 (1)	6	RAMENO / SAW ARM / SÄGERAHMEN		1
6	201.ER257-510 (2)	0	VALEC ZVEDACI / LIFTING CYLINDER / HEBEZYLINDER		1
7	201.ER273-470	1	SKLUZ / SLIDE / RUTSCH		1
8	201.ER301-350	2	PODSTAVEC / BASE / UNTERSATZ		1
9	201.ER303-350	0	SVERAK / VICE / SCHRAUBSTOCK		1
10	201.ER311-340	0	TRAT / TRACK / BAHN		1
11	201.ER311-360	1	PODAVAC / FEEDER / VORSCHUB		1
12	201.ER311-370	2	POHON / DRIVE / ANTRIEB		1
13	201.ER314-320	0	UPINANI HORNI / TOP CLAM / SPANNVORRICHTUNG OBEN		1
14	201.ER314-355	1	PAKA / LEVER / HEBEL		1
15	30.ER254-003 (3)	1	CEP / LUG / BOLZEN	d 30	1
16	30.ER254-106 (3)	1	DRZAK / HOLDER / HALTER	P3x32	1
17	30.ER254-305 (3)	1	KRYT RAMENE / SHOULDER COVER / RAHMENABDECKUNG		1
18	30.ER2599-301	0	STITEK TYPOVY / MACHINE LABEL / MASCHINE SCHILD	P 0.5x65	1
19	30.ER311-306	0	PLECH / PLATE / BLECH	P 2x176	1
20	30.ER332-355	0	DRZAK / HOLDER / HALTER	P 4x77	1
21	31.0599-005	0	SAMOLEPKA / STICKER / AUFKLEBER		1
22	90.013.27.012 (3)	0	SROUB PULKULATY / HALF ROUND BOLT / HALBRUNDSCHRAUBE	M6X14	2
23	90.013.9Z.103 (3)	0	SROUB PULKULATY / HALF ROUND BOLT / HALBRUNDSCHRAUBE	M4x25	2
24	90.013.9Z.114 (3)	0	SROUB PULKULATY / HALF ROUND BOLT / HALBRUNDSCHRAUBE	M6X10	2
25	90.150.50.004 (3)	0	PODLOZKA / WASHER / UNTERLEGSCHEIBE	PODLOZKA 6,4	2
26	90.152.50.001 (3)	0	PODL VEJIROVA ZN / /	6.4	2
27	90.152.50.005 (3)	0	PODLOZKA VEJIROVA / /	PODLOZKA 4,3	2
28	91.173.012 (3)	0	SPINAC KONCOVY / END SWITCH / ENDSCHALTER		1
29	92.001.131	0	AGREGAT HYDRAULICKY / HYDRAULIC GENERATOR / HYDRAULIKAGGREGAT	S001_770_1	1
30	97.001.042	2	PALETA PREPRAVNI / /	SESTAVA	1
31	99.900.039	0	SAMOLEPKA / STICKER / AUFKLEBER	NEBEZP.STLACENI	1
32	99.900.044	0	SAMOLEPKA / /		1
33	99.900.045	0	SAMOLEPKA / STICKER / AUFKLEBER		1
34	99.900.047	0	SAMOLEPKA / STICKER / AUFKLEBER		1

Cislo Sestavy/Number of assembly/Nummer der Baugruppe; Verze (Ver.)/Version/Version; Nazev sestavy/Assembly title/Name der Baugruppe; Pozice (Poz.)/Position/Position; Objednaci cislo/Purchase order number/Bestellnummer; Nazev polozky/Volume title/Name der Position; Rozmer/Stock size/Abmessung

7.3. Ergonomic 320.258 GANC

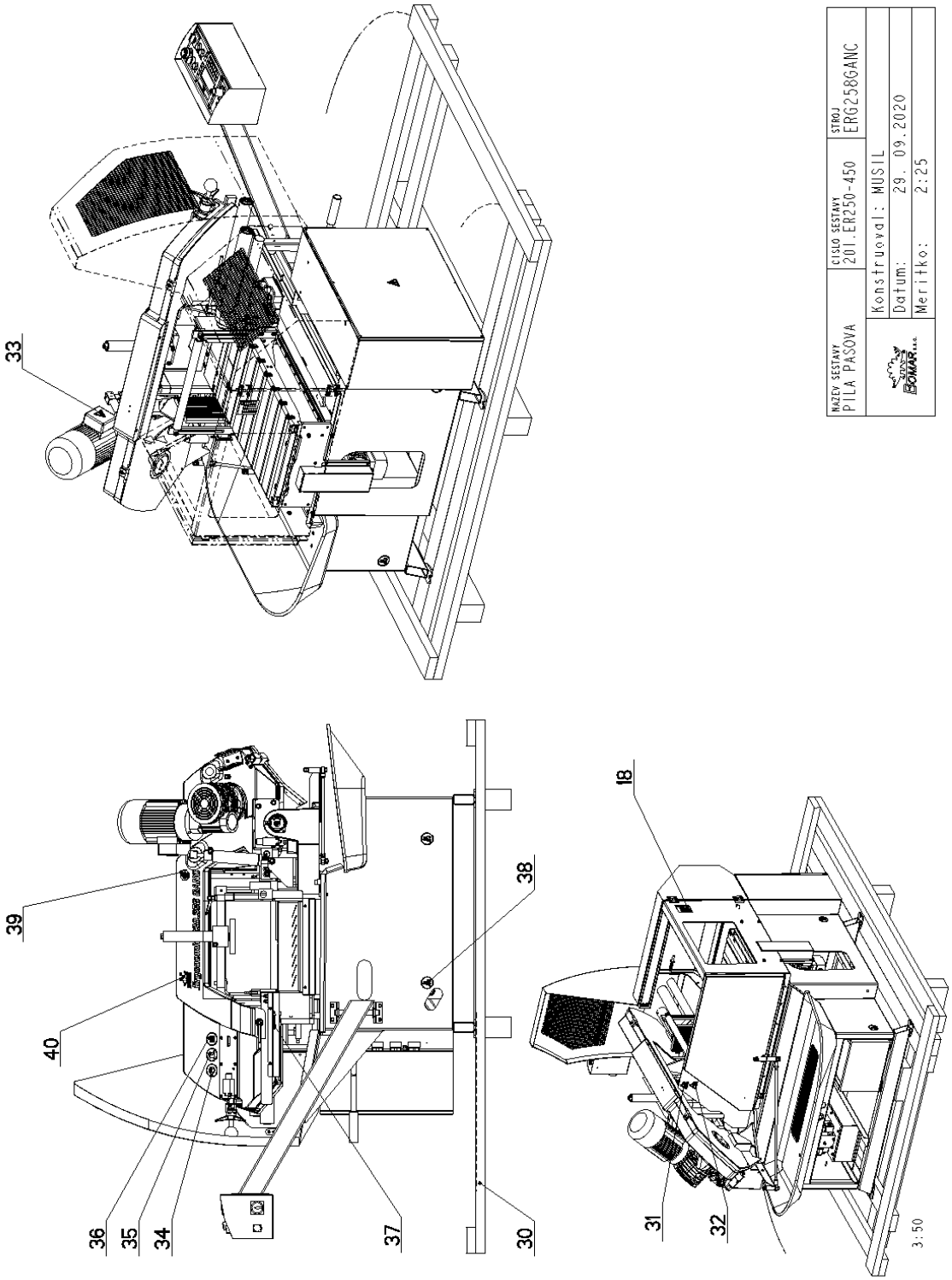

35	99.900.048	0	SAMOLEPKA / STICKER / AUFKLEBER		1
36	99.900.049	0	SAMOLEPKA / STICKER / AUFKLEBER		1
37	99.900.053	0	SAMOLEPKA / STICKER / AUFKLEBER		1
38	99.900.068	0	SAMOLEPKA / STICKER / AUFKLEBER	pouziti vysokozvizneno vazikku	4
39	99.901.032	0	SAMOLEPKA / STICKER / AUFKLEBER	CETIFIKACNI SAMOLEPKA	1
40	99.901.104	0	SAMOLEPKA / STICKER / AUFKLEBER		1

1.ZRUS. RAMENO 201.ER254-600 A NAHR. 201.ER254-700. 127/ZM166 25.4.2019 IVICIC
2.ZRUS.VALEC ZVEDACI 201.ER257-310 A NAHR.201.ER257-510. 031/ZM036 27.2.2020 SLEZACKOVA
3.PRID.SOUCASTI Z RAMENE - 30.ER254-305;2x90.150.50.004;2x90.013.27.012;30.ER254-106;2x90.013.27.114;2x90.152.50.001;
91.173.012;2x90.013.97.103;2x90.152.50.005;CEP 30.ER254-003. 171/ZM311 29.9.2020 SLEZACKOVA

Cisla Sestavy/Number of assembly/Nummer der Baugruppe; Verze (Ver.)/Version/Version; Nazev sestavy/Assembly title/Name der Baugruppe; Pozice (Poz.)/Position/Position;
Objednaci cislo/Purchase order number/Bestellnummer; Nazev polozky/Volume title/Name der Position; Rozmer/Stock size/Abmessung

7.5. Odměřování / Measuring / Gehrungsmessung

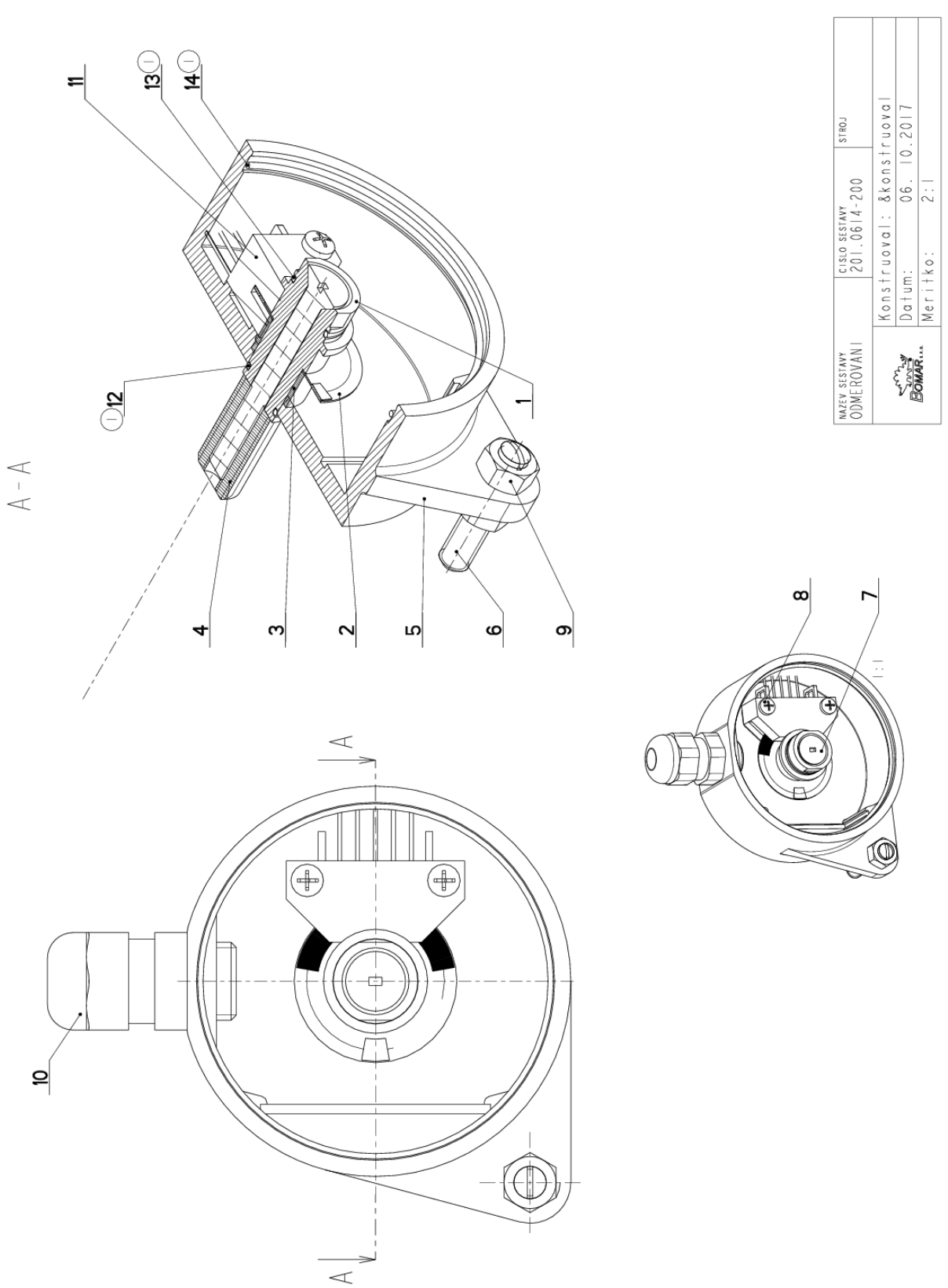

7.6. Kusovník / Piece list / Stückliste - Odměřování / Measuring / Gehrungsmessung

Cislo Sestavy	Ver.	Nazev sestavy
201.0614-200	1	ODMEROVANI/MEASURING/GEHRUNGSMESSUNG

Poz.	Objednaci cislo	Ver.	Nazev polozky	Rozmer	Ks
1	30.0614-201	0	CEP / LUG / BOLZEN	d 16	1
2	30.0614-203	0	CLONA / CURTAIN / SCHÜRZE	FOLIE 0.3	1
3	30.0614-204	0	POUZDRO / SLEEVE / BÜCHSE	TR 13x1	1
4	30.0614-208	0	SROUB / BOLT / SCHRAUBE	TYC M10	1
5	31.0614-202	0	KRABICE / BOX / DOSE	VYLISEK-PLAST	1
6	90.002.20.027	0	SROUB STAVECI / ADJUSTMENT BOLT / STELLSCHRAUBE	SROUB M5X25	1
7	90.011.27.019	0	ZAPUSTNY IMBUS / COUNTERSINK BOLT / SENKSCHRAUBE	SROUB M5X40	1
8	90.014.50.004	0	SROUB / BOLT / SCHRAUBE	M2.5x14	2
9	90.100.55.003	0	MATICE / NUT / MUTTER	MATICE _ M5	2
10	91.070.010	0	PRUCHODKA / LEADTHROUGH / DURCHFÜHRUNG	M12x1.5 CERNA	1
11	91.400.043	0	SNIMAC / SENSOR / SENSOR		1
12	96.001.020 (1)	0	KROUZEK O STATICKY / STATIC O RING / O-RING STATISCH	9x1	1
13	96.001.021 (1)	0	KROUZEK O STATICKY / STATIC O RING / O-RING STATISCH	11x1	1
14	96.002.027 (1)	0	KROUZEK TESNICI / SEAL RING / DICHTUNGSRING	50x1	1

1.PRID. KROUZKY STATICKE 96.001.020 A 96.001.021, KROUZEK TESNICI 96.002.027. ZM028 23.1.2019 SZABARI

Cislo Sestavy/Number of assembly/Nummer der Baugruppe; Verze (Ver.)/Version/Version; Nazev sestavy/Assembly title/Name der Baugruppe; Pozice (Poz.)/Position/Position; Objednaci cislo/Purchase order number/Bestellnummer; Nazev polozky/Volume title/Name der Position; Rozmer/Stock size/Abmessung

7.7. Upínání horní / Top clam / Spannvorrichtung oben

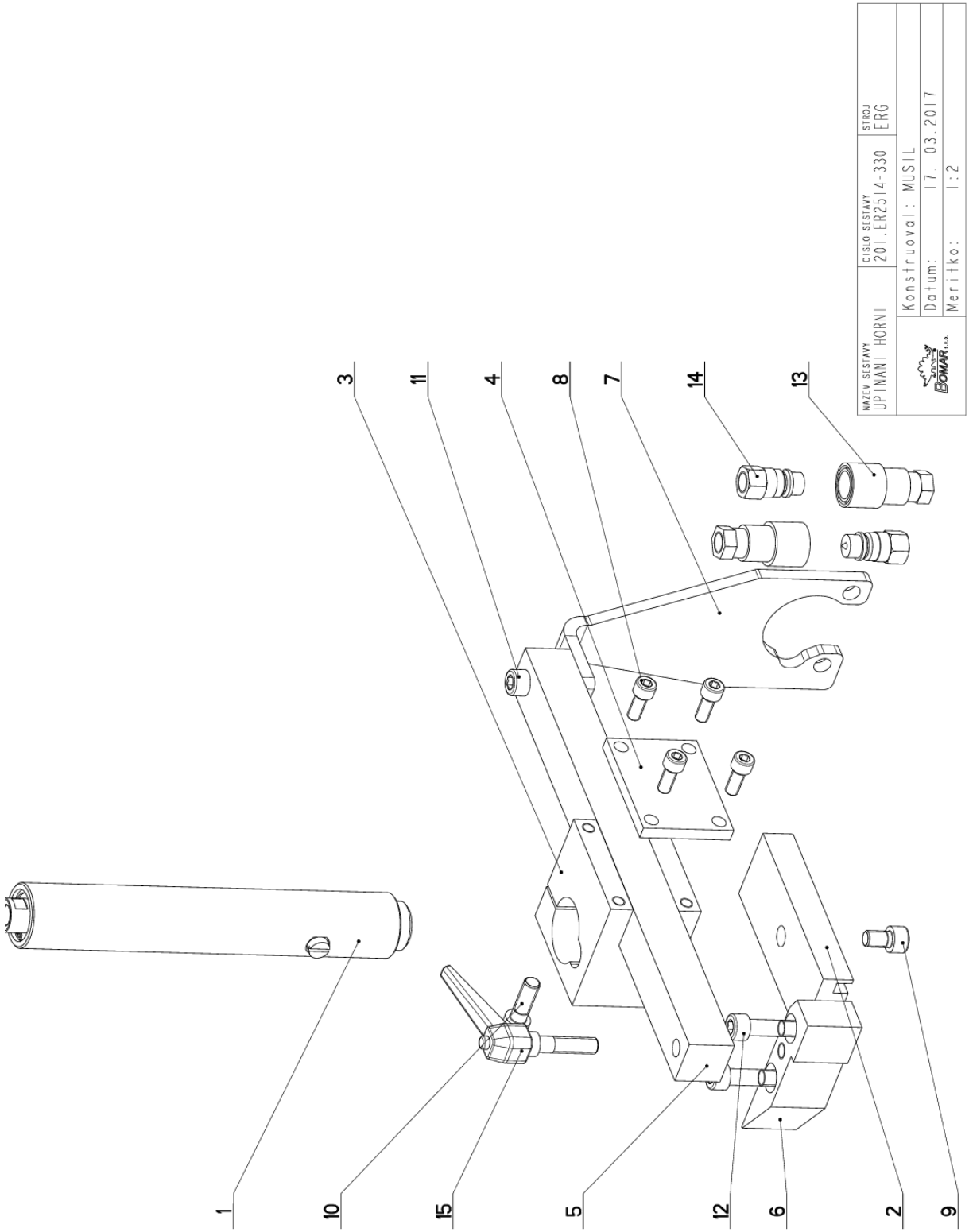

7.8. Kusovník / Piece list / Stückliste - Upínání horní / Top clam / Spannvorrichtung oben

Cislo Sestavy	Ver.	Nazev sestavy
201.ER2514-330	0	UPINANI HORNI/TOP CLAM/SPANNVORRICHTUNG OBEN

Poz.	Objednaci cislo	Ver.	Nazev polozky	Rozmer	Ks
1	201.ER307-340	0	VALEC UPINACI / FIXING CYLINDER / SPANNZYLINDER		1
2	30.2314-006		CELIST UPINACE / /	TYC 50x20	1
3	30.BC2314-243	0	KOSTKA / CUBE / WÜRFEL	HR 80x80	1
4	30.BC2314-244	0	DESKA / BOARD / PLATTE	P 8x60	1
5	30.ER2514-331	0	LISTA VODICI / LEAD TRIM / FÜHRUNGSLEISTE	HR 30x30	1
6	30.ER2514-338	0	CELIST / JAW / BACKE	HR 110x30	1
7	30.ER2514-339	0	DESKA / BOARD / PLATTE	P 8x90	1
8	90.001.25.032	0	SROUB IMBUS / ALLEN HEAD BOLT / IMBUSSCHRAUBE	8x20	4
9	90.001.25.045	0	SROUB IMBUS / ALLEN HEAD BOLT / IMBUSSCHRAUBE	M10X16	1
10	90.001.25.048	0	SROUB IMBUS / ALLEN HEAD BOLT / IMBUSSCHRAUBE	M10X30	1
11	90.001.25.050	0	SROUB IMBUS / ALLEN HEAD BOLT / IMBUSSCHRAUBE	M10X40	1
12	90.001.25.052	0	SROUB IMBUS / ALLEN HEAD BOLT / IMBUSSCHRAUBE	M10X50	2
13	92.060.007	0	RYCHLOSPOJKA / QUICK CONNECT / SCHNELLKUPPLUNG	6 G1/4"	2
14	92.060.008	0	RYCHLOSPOJKA / QUICK CONNECT / SCHNELLKUPPLUNG	6 G1/4"	2
15	94.008.013	0	PAKA UPINACI / ATTACHMENT LEVER / SPANNHEBEL	M10	1

Cislo Sestavy/Number of assembly/Nummer der Baugruppe; Verze (Ver.)/Version/Version; Nazev sestavy/Assembly title/Name der Baugruppe; Pozice (Poz.)/Position/Position; Objednaci cislo/Purchase order number/Bestellnummer; Nazev polozky/Volume title/Name der Position; Rozmer/Stock size/Abmessung

7.9. Válec upínací / Fixing cylinder / Spannzylinder

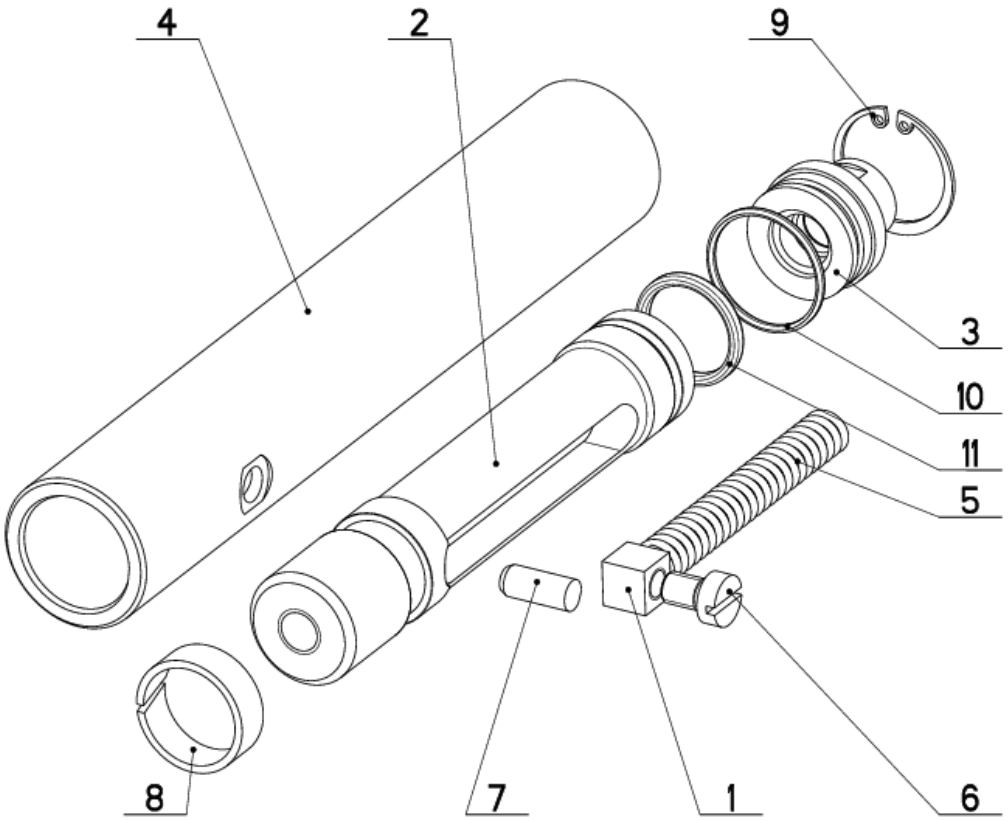

NAZEV SESTAVY	CISLO SESTAVY	STROJ
VALEC UPINACI	201.ER307-340	

BOMAR	Konstruoval:
	Datum: 09. 03.2017
	Meritko: 7:10

7.10. Kusovník / Piece list / Stückliste - Válec upínací / Fixing cylinder / Spannzylinder

Cislo Sestavy	Ver.	Nazev sestavy
201.ER307-340	0	VALEC UPINACI/FIXING CYLINDER/SPANNZYLINDER

Poz.	Objednaci cislo	Ver.	Nazev polozky	Rozmer	Ks
1	30.2107-205	0	DORAZ / STOP PIECE / ANSCHLAG	HR12	1
2	30.2114-317	3	PISTNICE / PISTON ROD / KOLBENSTANGE	TYC 30h6	1
3	30.2114-318	0	VIKO / COVER / DECKEL	d 32	1
4	30.ER307-346	0	TRUBKA / TUBE / ROHR	TR.40/30H8	1
5	31.2107-206	0	PRUZINA / SPRING / FEDER	2x12x84x25,5	1
6	90.012.50.011	0	SR. S VALC. HLAV. / ROLLER BOLT / ZYLINDERSCHRAUBE	SROUB M8X12	1
7	90.301.0Z.008	0	KOLIK VALCOVY / CYLINDRICAL PIN SOFT / ZYLINDERSTIFT WEICH	KOLIK 8X20	1
8	95.780.001	0	KROUZEK VODICI / LEAD RING / FUHRUNGSRING	10x2-F87	1
9	95.801.003	0	SEGR DIRA / INSIDE SAFETY RING / SICHERUNGSRING INNEN	POJISTNY KROUZEK 32	1
10	96.001.008	0	O-KROUZEK STATIC / STATIC O RING / O-RING STATISCH	26x2 NBR 70SH	1
11	96.002.012	0	KROUZEK O DYNAMICKY / DYNAMIC O RING / O-RING DYNAMISCH	24X3	1

Cislo Sestavy/Number of assembly/Nummer der Baugruppe; Verze (Ver.)/Version/Version; Nazev sestavy/Assembly title/Name der Baugruppe; Pozice (Poz.)/Position/Position; Objednaci cislo/Purchase order number/Bestellnummer; Nazev polozky/Volume title/Name der Position; Rozmer/Stock size/Abmessung

7.11. Kryty / Covers / Abdeckungen

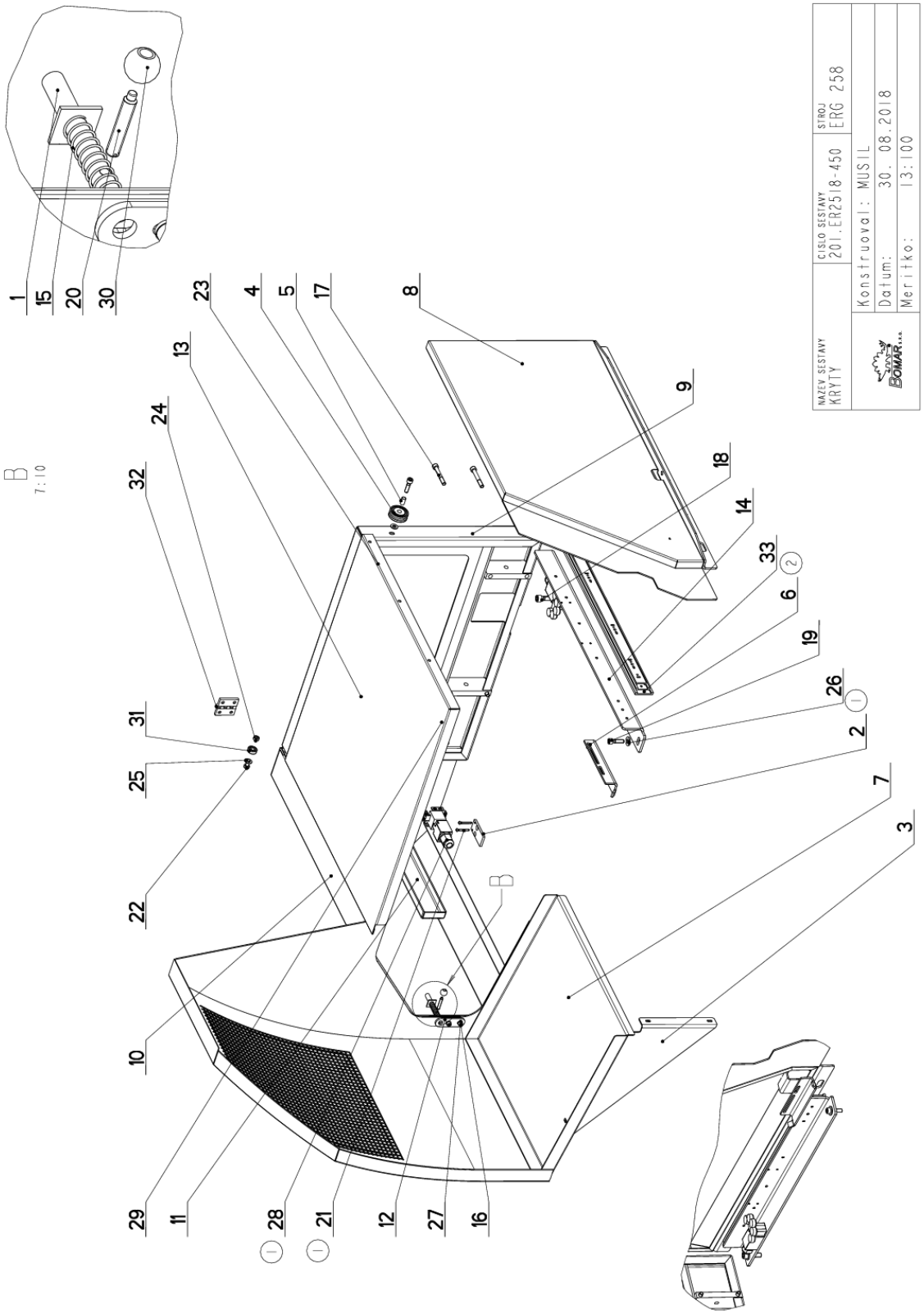

Cislo Sestavy	Ver.	Nazev sestavy
201.ER2518-450	2	KRYTY/COVERS/ABDECKUNGEN

Poz.	Objednaci cislo	Ver.	Nazev polozky	Rozmer	Ks
1	30.2801-008	0	TYC / POLE / STANGE	d 10	1
2	30.7901-032 (1)	0	DRZAK / HOLDER / HALTER	TYC 30x5	1
3	30.BC2318-210	0	DRZAK / HOLDER / HALTER	P 2.5x331,5	1
4	30.BC2318-362	0	ROLNA / PULLEY / ROLLE		1
5	30.BC2318-363	0	DISTANC / DISTANCE / DISTANZ	TR 10x1	1
6	30.BC2318-364 (2)	1	DORAZ / STOP PIECE / ANSCHLAG	P 4x57	1
7	30.ER2518-451	0	KRYT / COVER / ABDECKUNG		1
8	30.ER2518-453	0	KRYT / COVER / ABDECKUNG		1
9	30.ER2518-455	0	KRYT / COVER / ABDECKUNG		1
10	30.ER2518-459	0	KRYT PODAVACE / FEEDER COVER / VORSCHUBABDECKUNG		1
11	30.ER318-356	0	VZPERA / PROP / STREBE	P 3x93	1
12	30.ER318-358	0	PLECH / PLATE / BLECH	P 4x25	1
13	30.ER318-361	0	PLECH DEROVANY / PERFORATED PLATE / LOCHBLECH	P 1,5x698	1
14	30.ER318-362	1	PLECH / PLATE / BLECH	P 5x106	1
15	31.2801-014	0	PRUZINA / SPRING / FEDER	1x12.5x60x12	1
16	90.001.25.015	0	SROUB IMBUS / ALLEN HEAD BOLT / IMBUSSCHRAUBE	M6X10	6
17	90.001.25.040	0	SROUB IMBUS / ALLEN HEAD BOLT / IMBUSSCHRAUBE	M8X60	4
18	90.001.25.049	0	SROUB IMBUS / ALLEN HEAD BOLT / IMBUSSCHRAUBE	M10X35	1
19	90.001.55.083	0	SROUB IMBUS / ALLEN HEAD BOLT / IMBUSSCHRAUBE	M8X30	2
20	90.004.2D.005	0	SROUB STAVECI / ADJUSTMENT BOLT / STELLSCHRAUBE	SROUB M6X35	1
21	90.013.9Z.104 (1)	0	SROUB PULKULATY / HALF ROUND BOLT / HALBRUNDSCHRAUBE	M4x30	2
22	90.015.25.009	0	SROUB IMBUS / ALLEN HEAD BOLT / IMBUSSCHRAUBE	M8x16	1
23	90.100.55.005	0	MATICE / NUT / MUTTER	MATICE _ M8	1
24	90.101.55.001	0	MATICE / NUT / MUTTER	MATICE M8	1
25	90.150.50.005	0	PODLOZKA / WASHER / UNTERLEGSCHEIBE	PODLOZKA 8,4	2
26	90.163.00.011	0	PODLOZKA / WASHER / UNTERLEGSCHEIBE	NORD-LOCK	2
27	90.163.00.012	0	PODLOZKA / WASHER / UNTERLEGSCHEIBE	NORD-LOCK	4
28	91.173.012 (1)	0	SPINAC KONCOVY / END SWITCH / ENDSCHALTER	QKS8-2xNC	1
29	91.173.017	0	SPINAC KONCOVY / END SWITCH / ENDSCHALTER	PZ-FR630-M2	2
30	94.001.001	0	RUKOJET / HANDLE / GRIFF	M6 PRUMER 16	1
31	95.001.001	0	LOZISKO / BEARING / LAGER	608 2RS	1
32	99.100.011	0	PANT / HINGE / TÜRBAND	TYP 2189104	2
33	99.205.002	0	PROFIL / PROFILE / PROFIL		1

1.PRIDAN DRZAK 30.7901-032; 2x90.013.9Z.104; ZM.POLOHY 91.173.012; 172/ZM293 23.8.2018 SCERBA
2.ZRUS. DORAZ 30.ER318-364 A NAHR 30.BC2318-364. 178/ZM250 12.6.2019 SZABARI

Cislo Sestavy/Number of assembly/Nummer der Baugruppe; Verze (Ver.)/Version/Version; Nazev sestavy/Assembly title/Name der Baugruppe; Pozice (Poz.)/Position/Position; Objednaci cislo/Purchase order number/Bestellnummer; Nazev polozky/Volume title/Name der Position; Rozmer/Stock size/Abmessung

7.13. Konzola otočná / Turnable consol / Drehkonsole

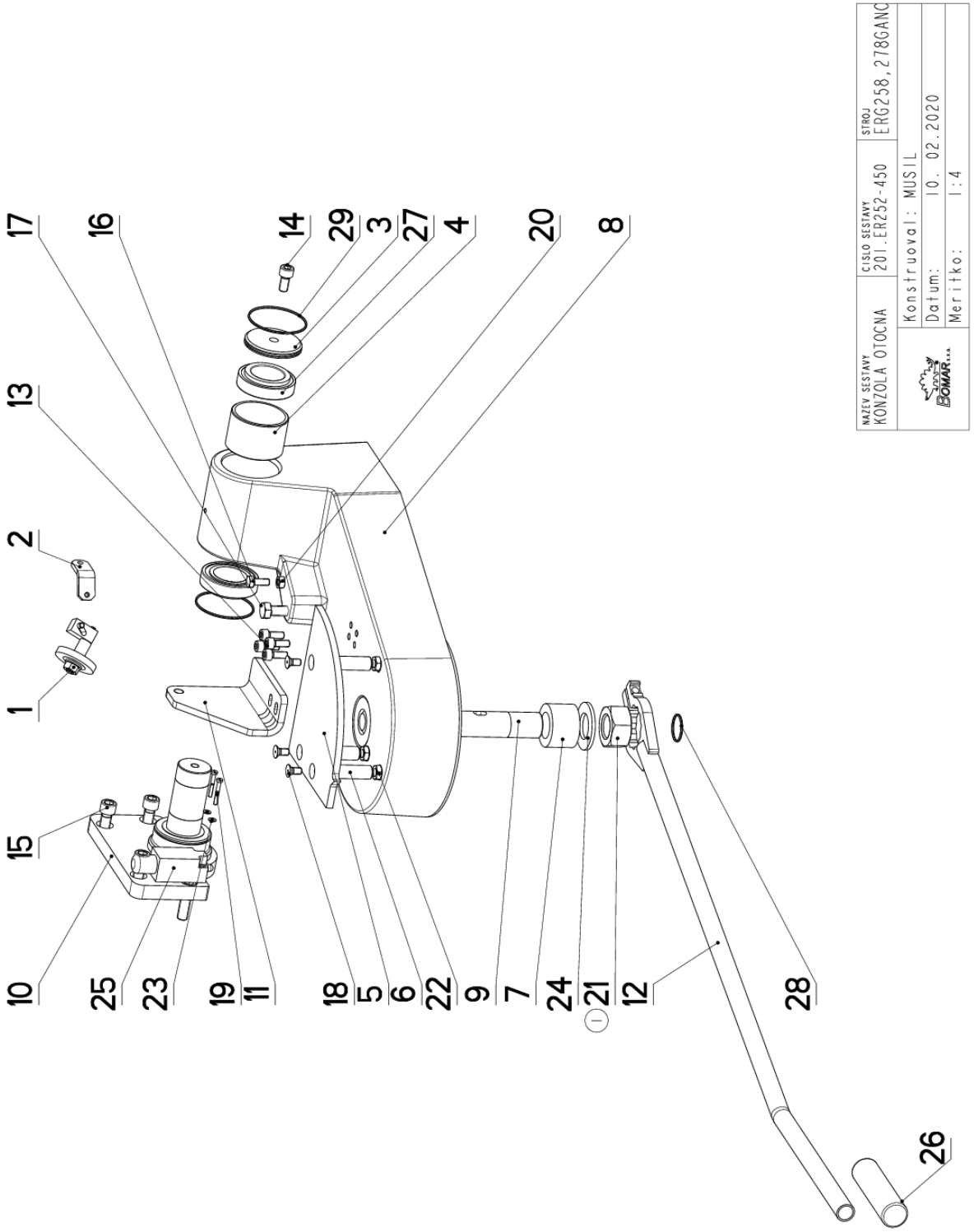

7.14. Kusovník / Piece list / Stückliste - Konzola otočná / Turnable consol / Drehkonsole

Cislo Sestavy	Ver.	Nazev sestavy
201.ER252-450	1	KONZOLA OTOCNA/TURNABLE CONSOL/DREHKONSOLE

Poz.	Objednaci cislo	Ver.	Nazev polozky	Rozmer	Ks
1	201.0704-100	0	KARTAC / BRUSH / BÜRSTE		1
2	30.0514-603	0	DRZAK / HOLDER / HALTER	P 5x20	1
3	30.0702-012	2	VIKO / COVER / DECKEL	P 8x70	1
4	30.8002-403	0	POUZDRO / SLEEVE / BÜCHSE	TR 70x5	1
5	30.BC232-207	1	DESKA / BOARD / PLATTE	P 8x160	1
6	30.BC232-208	0	CEP / LUG / BOLZEN	D 16	3
7	30.BC232-209	0	DISTANC / /	TR 51x10	1
8	30.BC232-301	1	KONZOLA / CONSOLE / KONSOLE		1
9	30.BC232-305	0	CEP / LUG / BOLZEN	SVARENO	1
10	30.ER252-114	3	KONZOLA / CONSOLE / KONSOLE		1
11	30.ER252-453	0	DRZAK / HOLDER / HALTER	P 8x113	1
12	30.ER332-304	0	PAKA / LEVER / HEBEL	SVARENO	1
13	90.001.25.032	0	SROUB IMBUS / ALLEN HEAD BOLT / IMBUSSCHRAUBE	8x20	4
14	90.001.25.046	0	SROUB IMBUS / ALLEN HEAD BOLT / IMBUSSCHRAUBE	M10X20	1
15	90.001.25.059	0	SROUB IMBUS / ALLEN HEAD BOLT / IMBUSSCHRAUBE	M12X35	4
16	90.005.55.015	0	SROUB 6HRANNY / 6 SIDED BOLT / SECHSKANTSCHRAUBE	SROUB M8X20	1
17	90.005.55.034	0	SROUB 6HRANNY / 6 SIDED BOLT / SECHSKANTSCHRAUBE	SROUB M12X40	1
18	90.011.27.012	0	ZAPUSTNY IMBUS / COUNTERSINK BOLT / SENKSCHRAUBE	SROUB M8X16	3
19	90.012.50.007	0	SROUB / ROLLER BOLT / ZYLINDERSCHRAUBE	SROUB M4X30	2
20	90.100.55.005	0	MATICE / NUT / MUTTER	MATICE _ M8	1
21	90.100.55.014 (1)	0	MATICE / NUT / MUTTER	MATICE _ M30 ZN	1
22	90.101.55.002	0	MATICE / NUT / MUTTER	MATICE M10	3
23	90.150.50.002	0	PODLOZKA / WASHER / UNTERLEGSCHEIBE	PODLOZKA 4,3	2
24	90.150.50.018	0	PODLOZKA / WASHER / UNTERLEGSCHEIBE	PODLOZKA 31	1
25	91.173.007	0	SPINAC KONCOVY / END SWITCH / ENDSCHALTER	-R1WK	1
26	94.004.502	0	RUKOJET / HANDLE / GRIFF	D22	1
27	95.300.002	0	LOZISKO KUZELIK / BEARING / LAGER	32008AX	2
28	96.001.008	0	O-KROUZEK STATIC / STATIC O RING / O-RING STATISCH	26x2 NBR 70SH	1
29	96.001.018	0	O-KROUZEK STATIC / STATIC O RING / O-RING STATISCH	63X2	2

1.ZR.MATICE 90.100.25.001 A NAHR. 90.100.55.014. 050/068 10.02.2020 KOSYK

Cislo Sestavy/Number of assembly/Nummer der Baugruppe; Verze (Ver.)/Version/Version; Nazev sestavy/Assembly title/Name der Baugruppe; Pozice (Poz.)/Position/Position; Objednaci cislo/Purchase order number/Bestellnummer; Nazev polozky/Volume title/Name der Position; Rozmer/Stock size/Abmessung

7.15. Kartáč / Brush / Burste

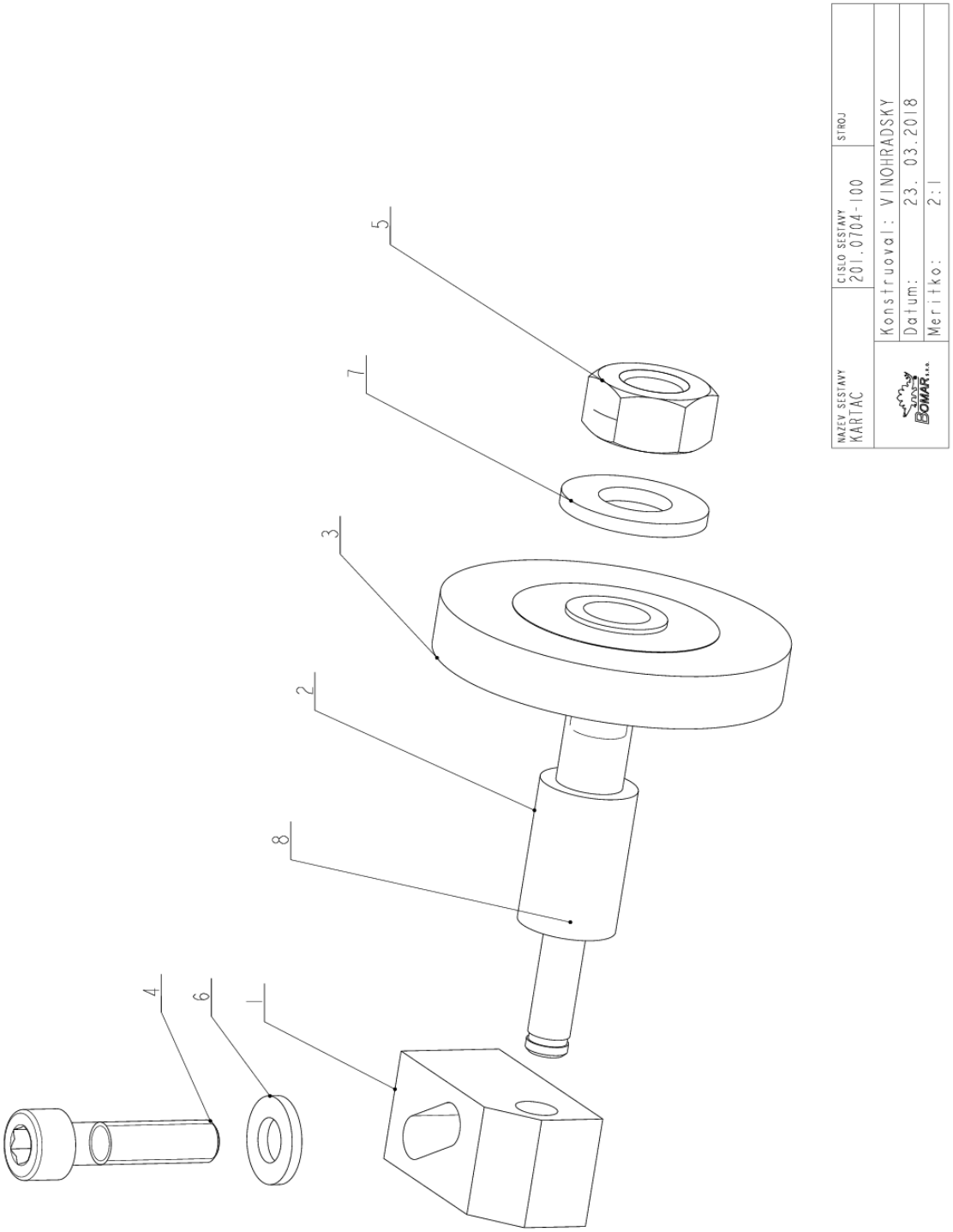

7.16. Kusovník / Piece list / Stückliste
Kartáč / Brush / Burste

Cislo Sestavy	Ver.	Nazev sestavy
201.0704-100	0	KARTAC/BRUSH/BÜRSTE

Poz.	Objednaci cislo	Ver.	Nazev polozky	Rozmer	Ks
1	30.0104-022	0	DRZAK / HOLDER / HALTER	HR 16x16	1
2	30.0704-029	0	HRIDEL / SHAFT / WELLE	d 14	1
3	31.0704-031	0	KARTAC / BRUSH / BÜRSTE	D 50/ d 9.5	1
4	90.001.25.019	0	SROUB IMBUS / ALLEN HEAD BOLT / IMBUSSCHRAUBE	M6X25	1
5	90.100.55.006	0	MATICE / NUT / MUTTER	MATICE _ M10	1
6	90.150.50.004	0	PODLOZKA / WASHER / UNTERLEGSCHEIBE	PODLOZKA 6,4	1
7	90.150.50.006	0	PODLOZKA / WASHER / UNTERLEGSCHEIBE	PODLOZKA 10,5	1
8	95.800.001	0	KROUZEK POJIST.VNEJS / OUTSIDE SAFETY RING / SICHERUNGSRING AUßEN	POJISTNY KROUZEK 6	1

Cislo Sestavy/Number of assembly/Nummer der Baugruppe; Verze (Ver.)/Version/Version; Nazev sestavy/Assembly title/Name der Baugruppe; Pozice (Poz.)/Position/Position; Objednaci cislo/Purchase order number/Bestellnummer; Nazev polozky/Volume title/Name der Position; Rozmer/Stock size/Abmessung

7.17. Rameno / Shoulder / Sägerahmen

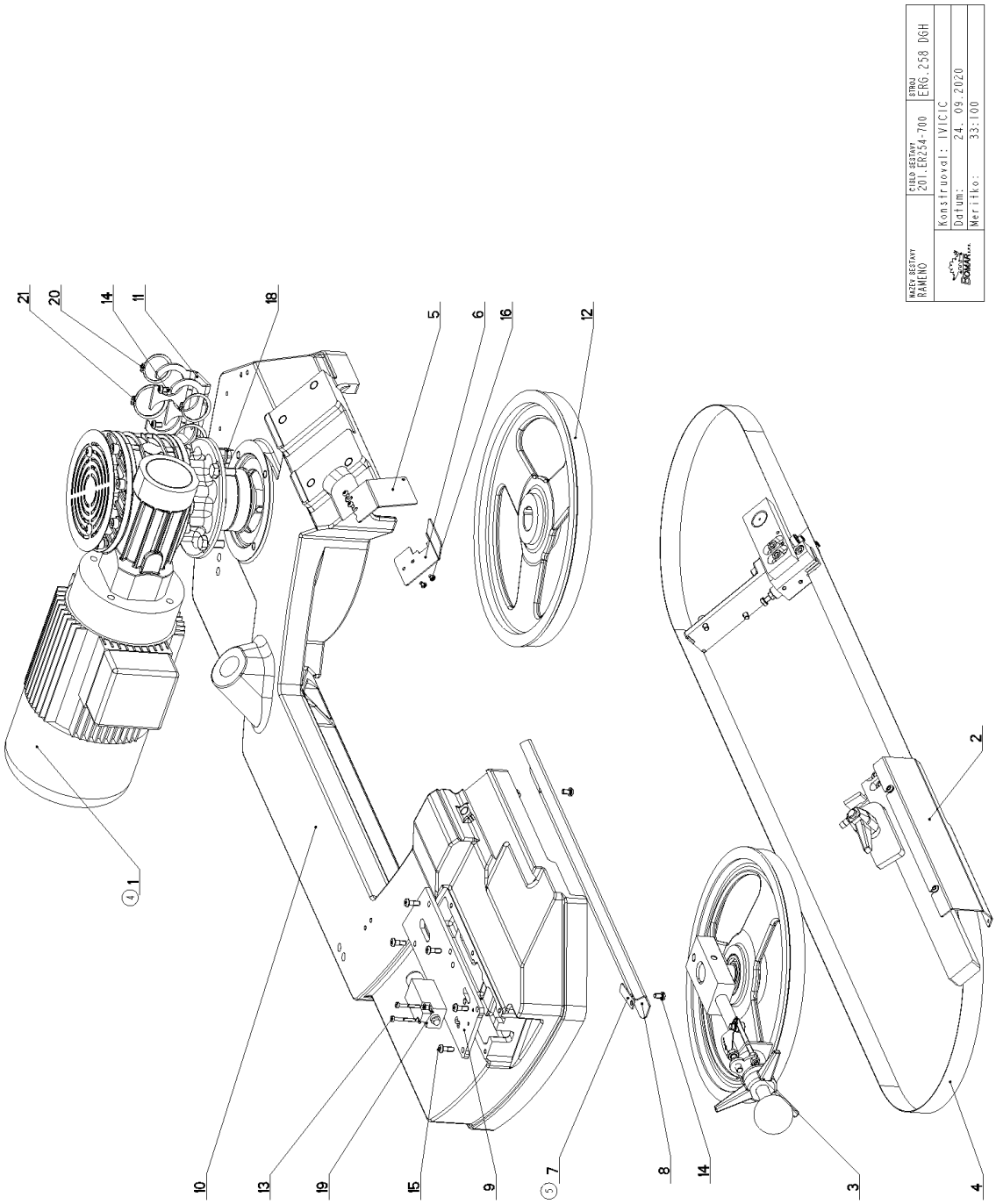

Cislo Sestavy	Ver.	Nazev sestavy
201.ER254-700	6	RAMENO/SAW ARM/SÄGERAHMEN

Poz.	Objednaci cislo	Ver.	Nazev polozky	Rozmer	Ks
1	201.ER255-100 (4)	1	POHON / DRIVE / ANTRIEB		1
2	201.ER256-200	4	VEDENI PASU / BELT GUIDE / SÄGEBANDFÜHRUNG		1
3	201.ER258-000	2	NAPINANI / TENSIONING / SPANNUNG		1
4	30.0504-961	0	PAS PILOVY / SAW BELT / SÄGEBAND	2910x25(7)x0.9	1
5	30.0704-038	1	KRYT PASU / BELT COVER / BANDABDECKUNG	P 1.5x56	1
6	30.0704-044	1	KRYT PASU / BELT COVER / BANDABDECKUNG	P 1.5x56	1
7	30.ER254-002 (5)	1	PLECH / PLATE / BLECH	P 1,5x12	1
8	30.ER254-004	1	KRYT RAMENE / SHOULDER COVER / RAHMENABDECKUNG	P 1,5x61	1
9	30.ER254-007	2	KRYT NAPINANI / TENSIONING COVER / BANDSPANNUNGSABDECKUNG	P 6x80	1
10	30.ER254-101	3	RAMENO / SAW ARM / SÄGERAHMEN		1
11	30.ER254-408	0	DRZAK / HOLDER / HALTER	P 4x100	1
12	30.ER265-601	1	KOLO HNACI / DRIVE WHEEL / ANTRIEBSRAD		1
13	90.012.50.007	0	SROUB / ROLLER BOLT / ZYLINDERSCHRAUBE	SROUB M4X30	2
14	90.013.27.007	0	SROUB PULKULATY / HALF ROUND BOLT / HALBRUNDSCHRAUBE	M6X10	4
15	90.013.27.008	0	SROUB PULKULATY / HALF ROUND BOLT / HALBRUNDSCHRAUBE	M6X16	6
16	90.013.27.017	0	SROUB PULKULATY / HALF ROUND BOLT / HALBRUNDSCHRAUBE	M4x6	4
17	90.152.50.005	0	PODLOZKA VEJIROVA / /	PODLOZKA 4,3	2
18	91.070.011	0	VYVODKA / BUSHING / TÜLLE	M16x1.5	1
19	91.173.007	0	SPINAC KONCOVY / END SWITCH / ENDSCHALTER	-RIWK	1
20	95.800.014	0	SEGR HRIDEL. / OUTSIDE SAFETY RING / SICHERUNGSRING AUSSEN	POJISTNY KROUZEK 35	2
21	95.800.016	0	SEGR HRIDEL. / OUTSIDE SAFETY RING / SICHERUNGSRING AUSSEN	POJISTNY KROUZEK 42	2

1.PRID.DRZAK 30.ER254-106; 164/ZM222 30.5.2019 SIMBERA
2.ZRUS.PODLOZKA 90.150.50.007,VENTIL 99.260.003,2xSROUB M6x10 90.013.27.007,DRZAK 30.1814-011 A REDUKCE 94.202.002. 229/ZM310 23.7.2019 SZABARI
3.PRID.2xSROUB M6x10 90.013.9Z.114,2xPODLOZKA 90.152.50.001,2xPODLOZKA 90.152.50.005,ZRUS.2xSROUB M4x30 90.013.9Z.104 A NAHR.2xSROUB M4x25 90.013.9Z103. 164/ZM393 24.9.2019 SZABARI
4.ZM.POLOHY POHONU 201.ER255-100, NATACIT PRI MONTAZI. 236/ZM036 26.02.2020 KOSYK
5.PR.PLECH 30.ER254-002. 120/ZM163 1.4.2020 KOSYK
6.ZRUS.SOUCASTI - KRYT RAMENE 30.ER254-305;2xPODLOZKA 90.150.50.004; 2xSROUB 90.013.27.012;CEP 30.ER254-003;DRZAK 30.ER254-106;SPINAC 91.173.012; 2xPODLOZKA 90.152.50.005;2xSROUB 90.013.9Z.103;2xPODLOZKA 90.152.50.001;2xSROUB 90.013.9Z.114 A DONO DO PILY 201.ER250-450 A 201.ER250-600. 171/ZM311 24.9.2020 SLEZACKOVA

Cislo Sestavy/Number of assembly/Nummer der Baugruppe; Verze (Ver.)/Version/Version; Nazev sestavy/Assembly title/Name der Baugruppe; Pozice (Poz.)/Position/Position; Objednaci cislo/Purchase order number/Bestellnummer; Nazev polozky/Volume title/Name der Position; Rozmer/Stock size/Abmessung

7.19. Pohon / Drive / Antieb

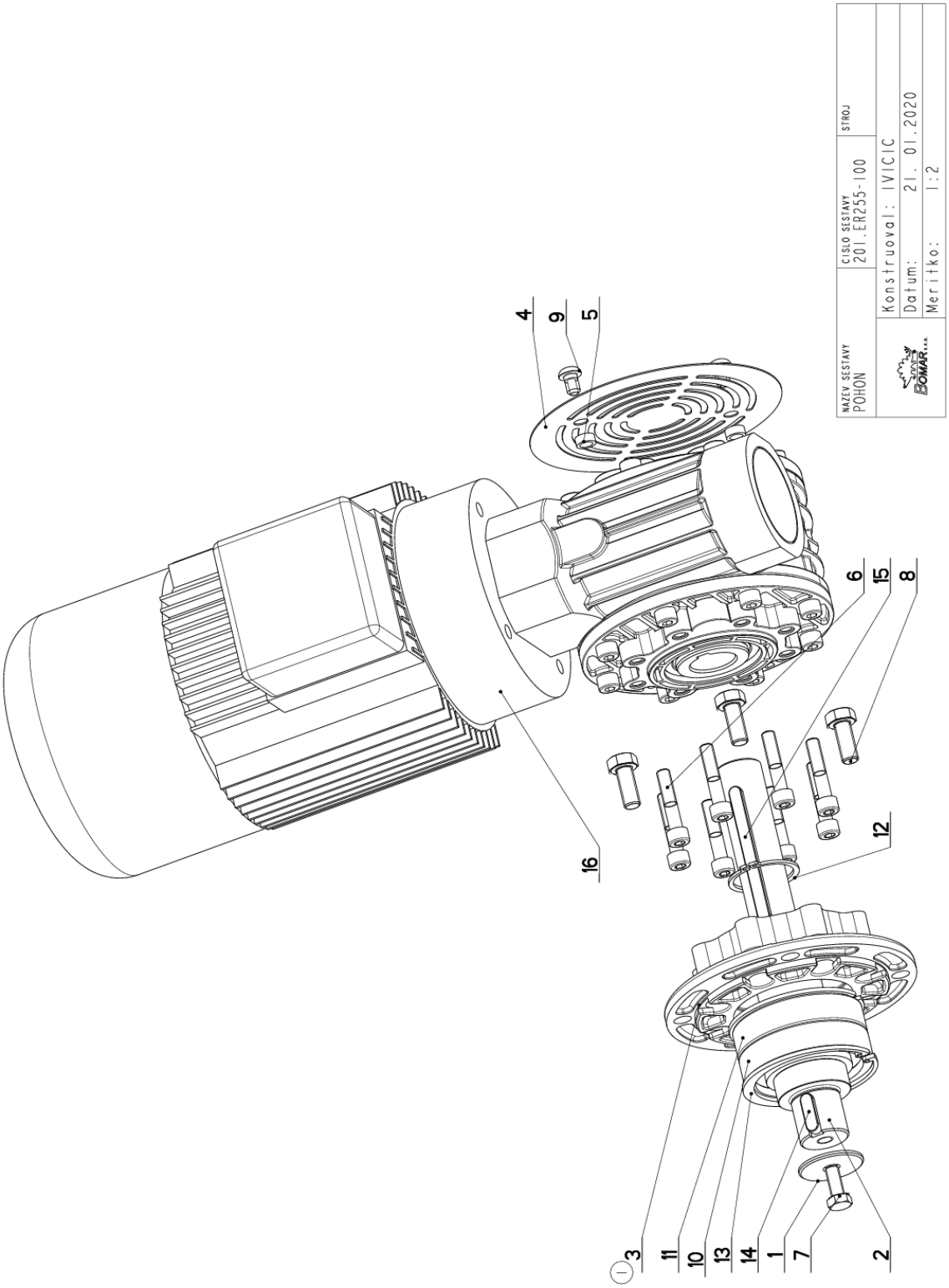

7.20. Kusovník / Piece list / Stückliste - Pohon / Drive / Antieb

Cislo Sestavy	Ver.	Nazev sestavy
201.ER255-100	1	POHON/DRIVE /ANTRIEB

Poz.	Objednaci cislo	Ver.	Nazev polozky	Rozmer	Ks
1	30.0505-011	1	PODLOZKA / WASHER / UNTERLEGSCHEIBE	TYC 40	1
2	30.ER255-101	0	HRIDEL / SHAFT / WELLE	D 45	1
3	30.ER255-102 (1)	0	PRIRUBA / FLANGE / FLANSCHE	ODLITEK	1
4	30.ER255-105	1	KRYT / COVER / ABDECKUNG	P0.8x156	1
5	30.ER255-107	0	DISTANC / DISTANCE / DISTANZ	TR 12x2	2
6	90.001.25.036	0	SROUB IMBUS / ALLEN HEAD BOLT / IMBUSSCHRAUBE	M8X40	8
7	90.005.55.015	0	SROUB 6HRANNY / 6 SIDED BOLT / SECHSKANTSCHRAUBE	SROUB M8X20	1
8	90.005.55.024	0	SROUB 6HRANNY / 6 SIDED BOLT / SECHSKANTSCHRAUBE	SROUB M10X25	4
9	90.013.27.011	0	SROUB PULKULATY / HALF ROUND BOLT / HALBRUNDSCHRAUBE	M8X12	2
10	95.001.021	0	LOZISKO / BEARING / LAGER	6208 2RS	1
11	95.200.001	0	LOZISKO / BEARING / LAGER	VALECKOVA L. IRADA	1
12	95.800.015	0	SEGR HRIDEL. / OUTSIDE SAFETY RING / SICHERUNGSRING AUSSEN	POJISTNY KROUZEK 40	1
13	95.801.013	0	SEGR DIRA / INSIDE SAFETY RING / SICHERUNGSRING INNEN	POJISTNY KROUZEK 80	2
14	95.810.007	0	PERO TESNE / TIGHT SPRING / PASSFEDER	PERO 8X7X25	1
15	95.810.028	0	PERO TESNE / TIGHT SPRING / PASSFEDER	PERO 8X7X90	1
16	99.001.260	0	POHON / DRIVE / ANTRIEB	M170-PAM90-20/1-FP-i20-B14	1

1.ZR.PRIRUBA 30.ER255-202 A NAHR. 30.ER255-102. 026/ZM039 21.01.2020 KOSYK

Cislo Sestavy/Number of assembly/Nummer der Baugruppe; Verze (Ver.)/Version/Version; Nazev sestavy/Assembly title/Name der Baugruppe; Pozice (Poz.)/Position/Position; Objednaci cislo/Purchase order number/Bestellnummer; Nazev polozky/Volume title/Name der Position; Rozmer/Stock size/Abmessung

7.21. Vedení pásu / Belt guide / Sägebandführung

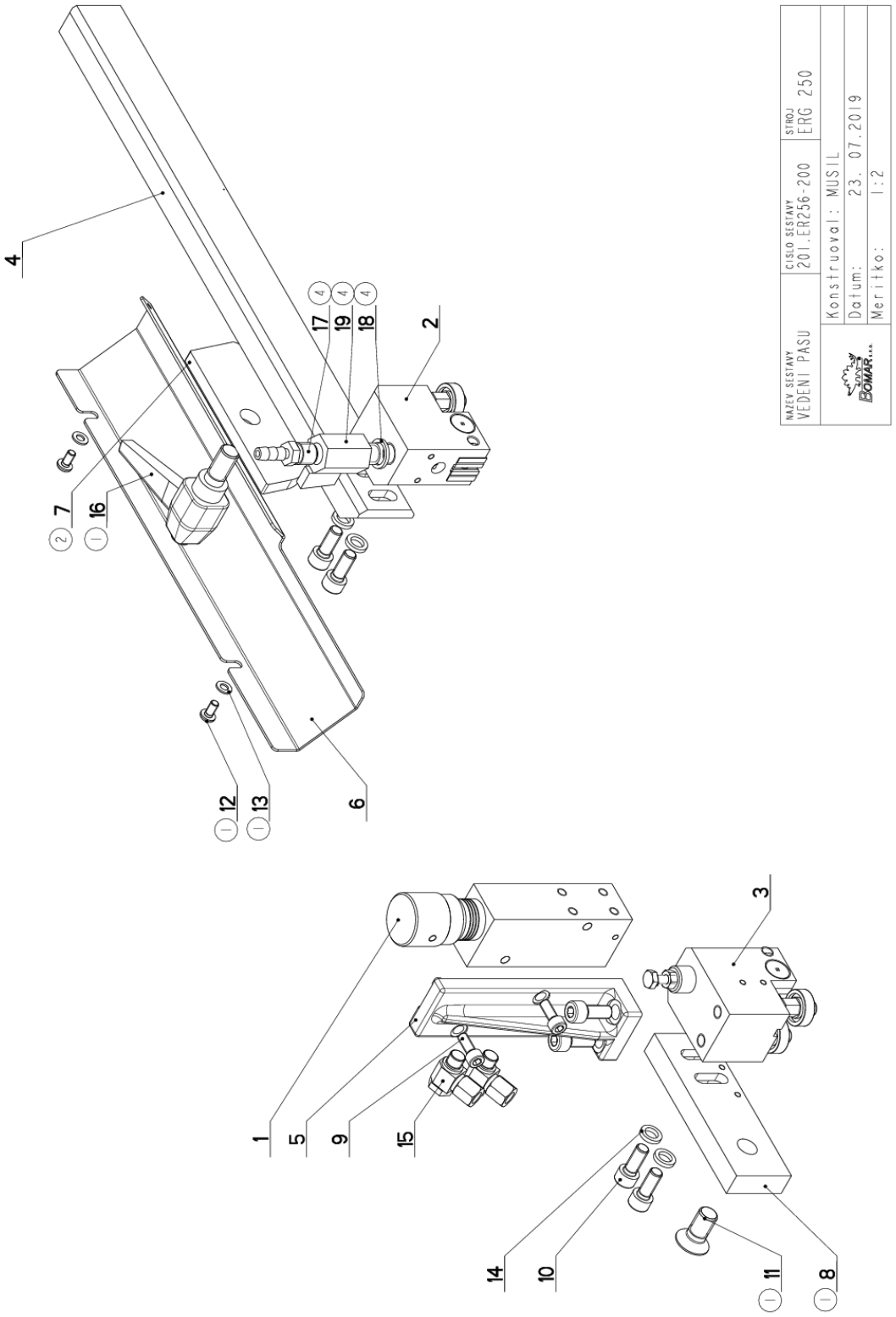

7.22. Kusovník / Piece list / Stückliste - Vedení pásu / Belt guide / Sägebandführung"

Cislo Sestavy	Ver.	Nazev sestavy
201.ER256-200	4	VEDENI PASU/BELT GUIDE/SÄGEBANDFÜHRUNG

Poz.	Objednaci cislo	Ver.	Nazev polozky	Rozmer	Ks
1	251.218	0	REGULACE PRITLAKU / PRESSURE REGULATION / SCHNITTDRUCKREGULATION		1
2	201.0110-100	2	KOSTKA VODICI / LEAD CUBE / FÜHRUNGSKLOTZ		1
3	201.2810-200	2	KOSTKA VODICI / LEAD CUBE / FÜHRUNGSKLOTZ		1
4	30.0104-015	7	LISTA / TRIM / LEISTE	HR 40x20	1
5	30.2804-001	0	DRZAK / HOLDER / HALTER		1
6	30.ER256-005	2	KRYT PASU / BELT COVER / BANDABDECKUNG	P 1,5x94	1
7	30.ER256-101 (2)	0	UPINKA / FASTENER / SPANNEISEN	P 8x40	1
8	30.FL256-002 (1)	1	LISTA / TRIM / LEISTE	HR 40x15	1
9	90.001.25.017	0	SROUB IMBUS / ALLEN HEAD BOLT / IMBUSSCHRAUBE	M6X16	2
10	90.001.25.032	0	SROUB IMBUS / ALLEN HEAD BOLT / IMBUSSCHRAUBE	8x20	6
11	90.011.27.025 (1)	0	ZAPUSTNY IMBUS / COUNTERSINK BOLT / SENKSCHRAUBE	SROUB M12X25	1
12	90.013.27.003 (1)	0	SROUB / BOLT / SCHRAUBE	M5X10	2
13	90.150.50.003 (1)	0	PODLOZKA / WASHER / UNTERLEGSCHEIBE	PODLOZKA 5,3	2
14	90.163.00.002	0	PODLOZKA / WASHER / UNTERLEGSCHEIBE	NORD-LOCK	4
15	92.003.104	0	SROUBENI UHLOVE / ANGLE BOLTING / WINKELVERSCHRAUBUNG	607002	2
16	94.008.008 (1)	0	PAKA UPINACI / ATTACHMENT LEVER / SPANNHEBEL	M12x25	1
17	94.202.002 (4)	0	REDUKCE / REDUCTION / ADAPTOR / REDUKTION	GES 6/R1/4"	1
18	96.080.001 (4)	0	TESNENI / SEALING / DICHTUNG	17.8x13.5x2	1
19	99.260.001 (4)	0	VENTIL / VALVE / VENTIL	VENTIL KULOVY	1

1.ZRUS.UPINKA 30.ER256-003 A NAHR.30.ER256-001,ZRUS.LISTA 30.ER236-002 A NAHR.30.FL256-002,ZRUS.PAKA UTAHOVACI M10x25 (94.008.005) A NAHR.PAKA UTAHOVACI M12x25(94.008.008),PRID.2xPODLOZKA 5,3(90.150.50.003),2xSROUB M5x10(90.013.27.003), 1xSROUB M12X25(90.011.27.025). 021/ZM147 12.4.2017 SLEZACKOVA
2.ZRUS.UPINKA 30.ER256-001 A NAHR.30.ER256-101. 148/ZM257 18.7.2018 SCERBA
3.ZRUSEN DRZAK 94.204.001 A NAHR.30.9010-003. 039/ZM056 12.2.2019 SLEZACKOVA
4.ZRUS. DRZAK 30.9010-003 A TRUBKA 30.3510-004, PRID. TESNENI 96.080.001, REDUKCE 94.202.002 A VENTIL 99.260.001. 229/ZM310 23.7.2019 SZABARI

Cislo Sestavy/Number of assembly/Nummer der Baugruppe; Verze (Ver.)/Version/Version; Nazev sestavy/Assembly title/Name der Baugruppe; Pozice (Poz.)/Position/Position; Objednaci cislo/Purchase order number/Bestellnummer; Nazev polozky/Volume title/Name der Position; Rozmer/Stock size/Abmessung

7.23. Kostka vodící / Lead cube / Führungsklotz

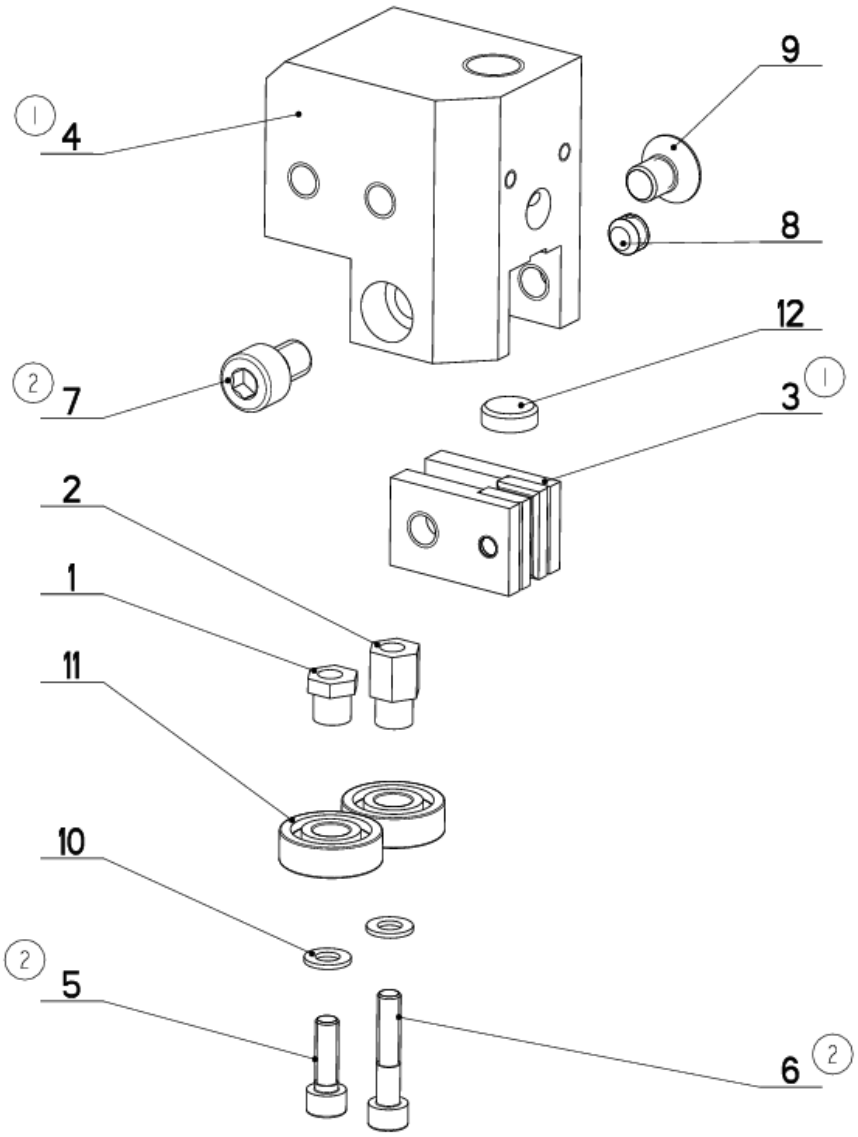

NAZEV SESTAVY	CISLO SESTAVY	STROJ
KOSTKA VODICI	201.0110-100	STG-240
BOMAR	Konstruoval:	
	Datum: 29. 11.2018	
	Meritko: 4:5	

7.24. Kusovník / Piece list / Stückliste
Kostka vodící / Lead cube / Führungsklotz

Cislo Sestavy	Ver.	Nazev sestavy
201.0110-100	2	KOSTKA VODICI/LEAD CUBE/FÜHRUNGSKLOTZ

Poz.	Objednaci cislo	Ver.	Nazev polozky	Rozmer	Ks
1	30.0104-018	0	EXCENTR / CAM / EXZENTER	SK10	1
2	30.0104-019	0	EXCENTR / CAM / EXZENTER	SK10	1
3	30.0104-021 (1)	0	DRZAK / HOLDER / HALTER		2
4	30.0104-032 (1)	2	KOSTKA VODICI / LEAD CUBE / FÜHRUNGSKLOTZ	TYC 60x40	1
5	90.001.25.009 (2)	0	SROUB IMBUS / ALLEN HEAD BOLT / IMBUSSCHRAUBE	M5X16	1
6	90.001.25.011 (2)		SROUB IMBUS / /	M5X25	1
7	90.001.25.029 (2)		SROUB / /	M8x12.00	1
8	90.002.20.009	0	SROUB STAVECI / ADJUSTMENT BOLT / STELLSCHRAUBE	SROUB M8X6	1
9	90.011.27.007	0	ZAPUSTNY IMBUS / COUNTERSINK BOLT / SENKSCHRAUBE	SROUB M8X12	1
10	90.150.50.003	0	PODLOZKA / WASHER / UNTERLEGSCHEIBE	PODLOZKA 5,3	2
11	95.001.001	0	LOZISKO / BEARING / LAGER	608 2RS	2
12	99.040.002	0	TVRDOKOV / HARD METAL / HM-SEGMENT	d 12	1

1.ZRUS.KOSTKA 30.0104-017 A NAHR.30.0104-032,ZRUS.DRZAK 30.0104-020 A NAHR. 30.0104-021. 297/272 12.8.2008 KRPEC

2.ZRUS 90.005.55.005 A NAHR.90.001.25.011; ZRUS 90.005.55.003 A NAHR.90.001.25.009;ZRUS 90.001.25.030 A NAHR.90.001.25.029;
260/ZM432 29.11.2018 SCERBA

Cislo Sestavy/Number of assembly/Nummer der Baugruppe; Verze (Ver.)/Version/Version; Nazev sestavy/Assembly title/Name der Baugruppe; Pozice (Poz.)/Position/Position;
Objednaci cislo/Purchase order number/Bestellnummer; Nazev polozky/Volume title/Name der Position; Rozmer/Stock size/Abmessung

7.25. Kostka vodící / Lead cube / Führungsklotz

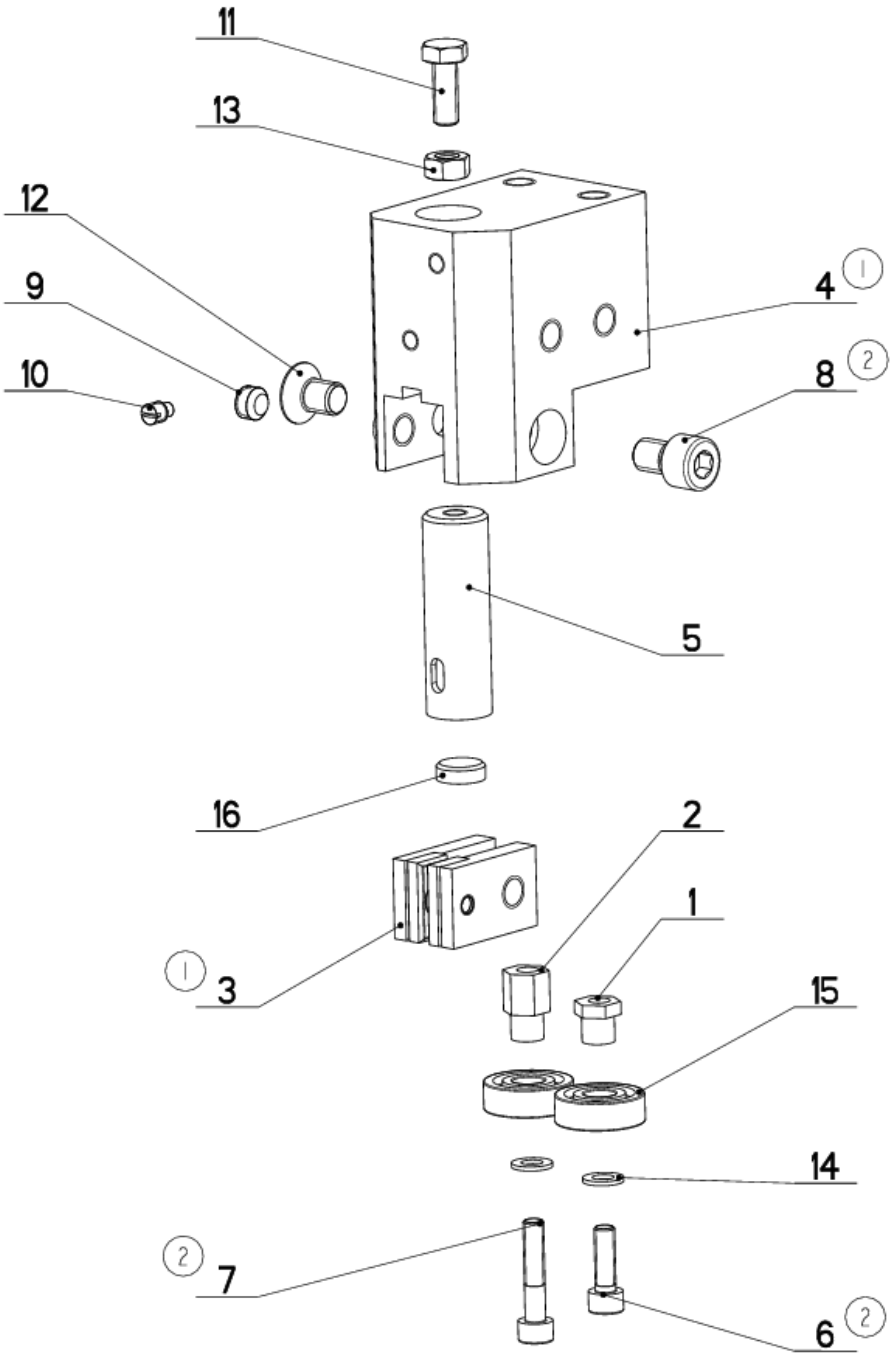

NAZEV SESTAVY	CISLO SESTAVY	STROJ
KOSTKA VODICI	201.2810-200	STG 240A/GA
BOMAR	Konstruoval:	
	Datum: 29. 11.2018	
	Meritko: 7:10	

7.26. Kusovník / Piece list / Stückliste
Kostka vodící / Lead cube / Führungsklotz

Cislo Sestavy	Ver.	Nazev sestavy
201.2810-200	2	KOSTKA VODICI/LEAD CUBE/FÜHRUNGSKLOTZ

Poz.	Objednaci cislo	Ver.	Nazev polozky	Rozmer	Ks
1	30.0104-018	0	EXCENTR / CAM / EXZENTER	SK10	1
2	30.0104-019	0	EXCENTR / CAM / EXZENTER	SK10	1
3	30.0104-021 (1)	0	DRZAK / HOLDER / HALTER		2
4	30.2804-012 (1)	2	KOSTKA VODICI / /	HR 60x40	1
5	30.3510-002	1	DRZAK TVRDOKOVU / POA HOLDER / HM-HALTER	TYC 16	1
6	90.001.25.009 (2)	0	SROUB IMBUS / ALLEN HEAD BOLT / IMBUSSCHRAUBE	M5X16	1
7	90.001.25.011 (2)		SROUB IMBUS / /	M5X25	1
8	90.001.25.029 (2)		SROUB / /	M8x12.00	1
9	90.002.2D.009	0	SROUB STAVECI / ADJUSTMENT BOLT / STELLSCHRAUBE	SROUB M8X6	1
10	90.004.2D.017	0	SROUB STAVECI / ADJUSTMENT BOLT / STELLSCHRAUBE	SROUB M5X8	1
11	90.005.55.007	0	SROUB 6HRANNY / 6 SIDED BOLT / SECHSKANTSCHRAUBE	SROUB M6X16	1
12	90.011.27.007	0	ZAPUSTNY IMBUS / COUNTERSINK BOLT / SENKSCHRAUBE	SROUB M8X12	1
13	90.100.55.004	0	MATICE / NUT / MUTTER	MATICE _ M6	1
14	90.150.50.003	0	PODLOZKA / WASHER / UNTERLEGSCHEIBE	PODLOZKA 5,3	2
15	95.001.001	0	LOZISKO / BEARING / LAGER	608 2RS	2
16	99.040.002	0	TVRDOKOV / HARD METAL / HM-SEGMENT	d 12	1

1.ZRUS.KOSTKA 30.2804-002 A NAHR.30.2804-012,ZRUS.DRZAK 30.0104-020 A NAHR.201.0104-021. 340/ZM343 16.10.2008 SLEZACKOVA

2.ZRUS 90.005.55.005 A NAHR.90.001.25.011; ZRUS 90.005.55.003 A NAHR.90.001.25.009;ZRUS 90.001.25.030 A NAHR.90.001.25.029;
260/ZM432 29.11.2018 SCERBA

Cislo Sestavy/Number of assembly/Nummer der Baugruppe; Verze (Ver.)/Version/Version; Nazev sestavy/Assembly title/Name der Baugruppe; Pozice (Poz.)/Position/Position;
Objednaci cislo/Purchase order number/Bestellnummer; Nazev polozky/Volume title/Name der Position; Rozmer/Stock size/Abmessung

7.27. Regulace přítlaku / Pressure regulation / Schnittdruckregulation

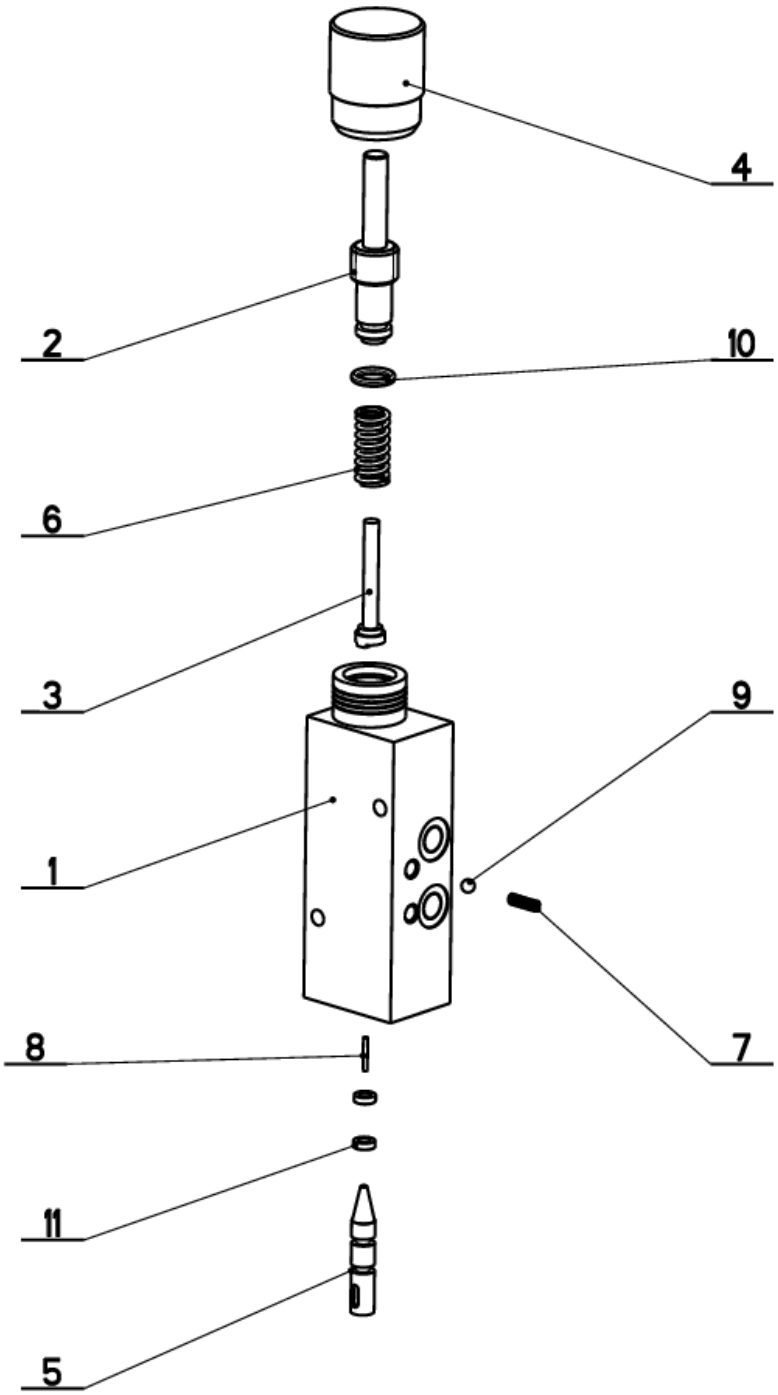

NAZEV SESTAVY	CISLO SESTAVY	STROJ
REGULACE PRITLAK	051.218	ERGO250

Konstruoval:	
Datum:	16. 08.2012
Meritko:	1:2

7.28. Kusovník / Piece list / Stückliste
Regulace přítlaku / Pressure regulation / Schnittdruckregulation

Cislo Sestavy	Ver.	Nazev sestavy
251.218	0	REGULACE PRITLAKU/PRESSURE REGULATION/SCHNITTDRUCKREGULATION

Poz.	Objednaci cislo	Ver.	Nazev polozky	Rozmer	Ks
1	30.2016-001	2	TELESO / BODY / KÖRPER	HR 40 x 40	1
2	30.2016-003	0	SROUB / BOLT / SCHRAUBE	d 16	1
3	30.2016-004	1	CIDLO / SENSOR / SENSOR	d 10	1
4	30.2016-005	0	KOLECKO / WHEEL / ROLLE	d 32	1
5	30.3516-002	0	JEHLA / NEEDLE / NADEL	d 8	1
6	31.2016-007	0	PRUZINA / SPRING / FEDER	d 11.6xx1.6	1
7	31.2016-008	0	PRUZINA / SPRING / FEDER	0.25x3,6x12x9.5	1
8	95.690.001	0	JEHLA / NEEDLE / NADEL	1.5x11.8	1
9	95.691.001	0	KULICKA LOZISKA / BALL / KUGEL	RB 4.5	1
10	96.001.003	0	KROUZEK O STATICKY / STATIC O RING / O-RING STATISCH	8X2	1
11	96.002.001	0	KROUZEK O DYNAMICKY / DYNAMIC O RING / O-RING DYNAMISCH	4X2	2

Cislo Sestavy/Number of assembly/Nummer der Baugruppe; Verze (Ver.)/Version/Version; Nazev sestavy/Assembly title/Name der Baugruppe; Pozice (Poz.)/Position/Position; Objednaci cislo/Purchase order number/Bestellnummer; Nazev polozky/Volume title/Name der Position; Rozmer/Stock size/Abmessung

7.29. Napínání / Tensioning / Spannung

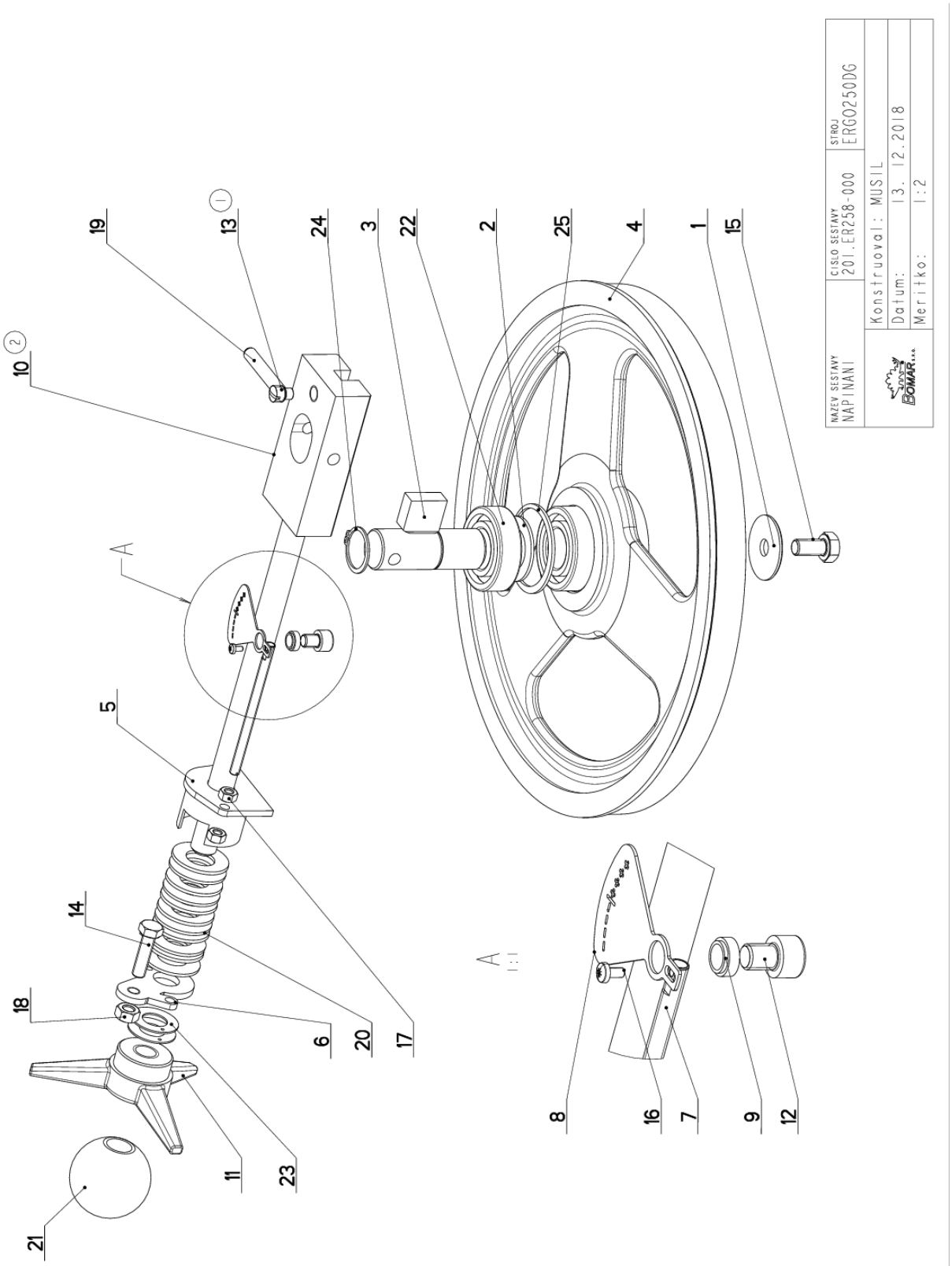

7.30. Kusovník / Piece list / Stückliste
Napínání / Tensioning / Spannung

Cislo Sestavy	Ver.	Nazev sestavy
201.ER258-000	2	NAPINANI/TENSIONING/SPANNUNG

Poz.	Objednaci cislo	Ver.	Nazev polozky	Rozmer	Ks
1	30.0505-011	0	PODLOZKA / WASHER / UNTERLEGSCHEIBE	TYC 40	1
2	30.0702-023	0	KROUZEK DISTANCNI / DISTANCE RING / DISTANZRING	P 2x40	1
3	30.0708-102	1	CEP NAPINANI / TENSIONING LUG / SPANNUNGSBOLZEN		1
4	30.ER258-001	0	KOLO NAPINACI / TENSIONING WHEEL / UMLENKRAD		1
5	30.ER258-004	0	DRZAK / HOLDER / HALTER		1
6	30.ER258-005	0	PRILOZKA / STRAP / LASCHE	P 4x42	1
7	30.ER258-006	0	TAHLO / GUY ROD / ZUGSTANGE	M6	1
8	30.ER258-007	0	STUPNICE / SCALE / SKALA	P 1x41	1
9	30.ER258-008	0	TRUBKA / TUBE / ROHR	TR 12x2	1
10	30.ER278-011 (2)	1	VEDENI / GUIDE / BACKENFÜHRUNG		1
11	31.0104-006	0	HVEZDICE / STAR WHEEL / STERN	PLAST	1
12	90.001.25.028	0	SROUB IMBUS / ALLEN HEAD BOLT / IMBUSSCHRAUBE	M8X10	1
13	90.004.2D.026 (1)	0	SROUB STAVECI / ADJUSTMENT BOLT / STELLSCHRAUBE	SROUB M10X14	1
14	90.005.55.017	0	SROUB 6HRANNY / 6 SIDED BOLT / SECHSKANTSCHRAUBE	SROUB M8X30	1
15	90.005.55.023	0	SROUB 6HRANNY / 6 SIDED BOLT / SECHSKANTSCHRAUBE	SROUB M10X20	1
16	90.014.50.008		SROUB / BOLT / SCHRAUBE	SROUB M3x6	1
17	90.100.55.004	0	MATICE / NUT / MUTTER	M6	2
18	90.100.55.005	0	MATICE / NUT / MUTTER	MATICE _ M8	1
19	90.300.0Z.012	0	KOLIK VALC. KAL. / CYLINDRICAL PIN TEMPERED / ZYLINDERSTIFT GEHARTET	KOLIK 8X50	1
20	90.350.0Z.002	0	PRUZINA TALIROVA / DISC SPRING / TELLERFEDER	35,5X18,3X2,0X2,8	11
21	94.001.005	0	RUKOJET / HANDLE / GRIFF	M16	1
22	95.001.018	0	LOZISKO / BEARING / LAGER	6205 2RS	2
23	95.750.001	0	KROUZEK KU / KU RING / KU-RING	16x1	2
24	95.800.012	0	SEGR HRIDEL. / OUTSIDE SAFETY RING / SICHERUNGSRING AUSSEN	POJISTNY KROUZEK 25	1
25	95.801.009	0	SEGR DIRA / INSIDE SAFETY RING / SICHERUNGSRING INNEN	POJISTNY KROUZEK 52	1

1.ZRUS.SROUB M8x10 90.004.2D.007 A NAHR. M10x14 90.004.2D.026. 169/ZM237 13.7.2017 CERNY

2.ZRUS.30.ER258-011 A NAHR.30.ER278-011 177/ZM295 23.8.2018 SCERBA

Cislo Sestavy/Number of assembly/Nummer der Baugruppe; Verze (Ver.)/Version/Version; Nazev sestavy/Assembly title/Name der Baugruppe; Pozice (Poz.)/Position/Position; Objednaci cislo/Purchase order number/Bestellnummer; Nazev polozky/Volume title/Name der Position; Rozmer/Stock size/Abmessung

7.31. Válec zvedací / Lifting cylinder / Hebezylinder

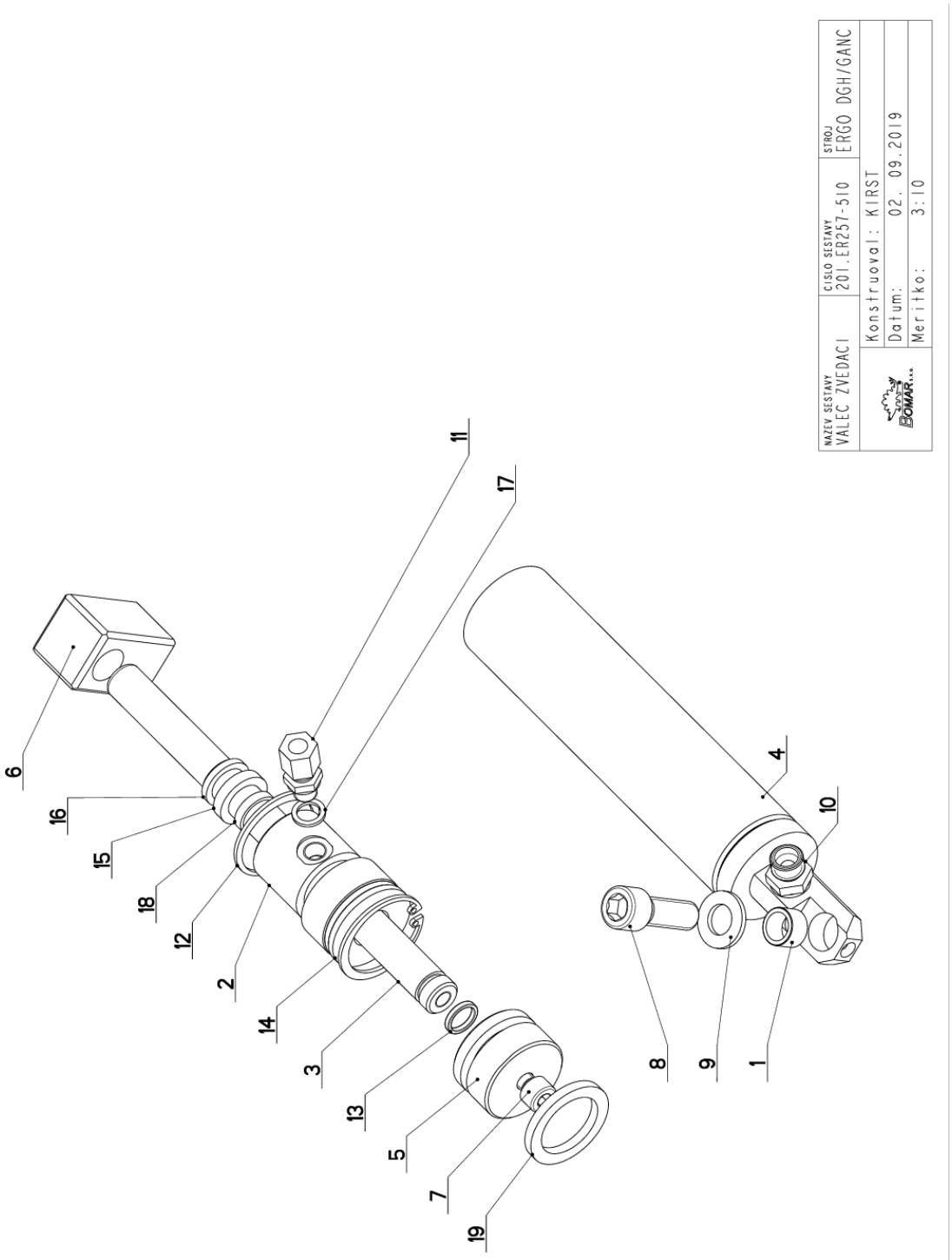

7.32. Kusovník / Piece list / Stückliste
Válec zvedací / Lifting cylinder / Hebezylinder

Cislo Sestavy	Ver.	Nazev sestavy
201.ER257-510	0	VALEC ZVEDACI/LIFTING CYLINDER/HEBEZYLINDER

Poz.	Objednaci cislo	Ver.	Nazev polozky	Rozmer	Ks
1	30.0507-913	3	POUZDRO / SLEEVE / BÜCHSE	d 16	1
2	30.ER257-113	0	VIKO / COVER / DECKEL	D 45	1
3	30.ER257-503	0	PISTNICE / PISTON ROD / KOLBENSTANGE	D16	1
4	30.ER257-511	0	VALEC UPINACI / FIXING CYLINDER / SPANNZYLINDER		1
5	30.ER257-512	0	PIST / PISTON / KOLBEN	D45	1
6	30.LC07-002	1	DRZAK / HOLDER / HALTER	HR 30x30	1
7	90.001.25.032	0	SROUB IMBUS / ALLEN HEAD BOLT / IMBUSSCHRAUBE	8x20	1
8	90.001.25.059	0	SROUB IMBUS / ALLEN HEAD BOLT / IMBUSSCHRAUBE	M12X35	1
9	90.150.50.007	0	PODLOZKA / WASHER / UNTERLEGSCHEIBE	PODLOZKA 13	1
10	92.002.001	0	SROUBENI PRIME / DIRECT BOLTING / GERADE VERSCHRAUBUNG	G 1/4"	1
11	92.002.102	0	SROUBENI / BOLTING / VERSCHRAUBUNG	S-GEV-8LLR	1
12	95.801.005	0	SEGR DIRA / INSIDE SAFETY RING / SICHERUNGSRING INNEN	POJISTNY KROUZEK 40	2
13	96.002.006	0	KROUZEK O DYNAMICKY / DYNAMIC O RING / O-RING DYNAMISCH	12x2 NBR 70SH	1
14	96.002.017	0	KROUZEK O DYNAMICKY / DYNAMIC O RING / O-RING DYNAMISCH	34x3 NBR 70SH	1
15	96.041.001	0	TESNENI / SEALING / DICHTUNG	d16	1
16	96.060.001	0	KROUZEK STIRACI / SCRAPER RING / ABSTREIFRING	KROUZEK STIRACI 16	1
17	96.082.001	0	KROUZEK TESNICI / SEAL RING / DICHTUNGSRING	10/14x1.5 CU	1
18	96.084.008	0	KROUZEK VODICI / LEAD RING / FÜHRUNGSRING	GR4300160	1
19	96.900.015	0	TESNENI PISTU / /	PT0200400-T46N	1

Cislo Sestavy/Number of assembly/Nummer der Baugruppe; Verze (Ver.)/Version/Version; Nazev sestavy/Assembly title/Name der Baugruppe; Pozice (Poz.)/Position/Position; Objednaci cislo/Purchase order number/Bestellnummer; Nazev polozky/Volume title/Name der Position; Rozmer/Stock size/Abmessung

Cislo Sestavy	Ver.	Nazev sestavy
201.ER273-470	1	SKLUZ/SLIDE/RUTSCH

Poz.	Objednaci cislo	Ver.	Nazev polozky	Rozmer	Ks
1	30.BC233-209	1	DESKA / BOARD / PLATTE	P 1x114	1
2	30.ER273-471	1	ROST / GRILL / GITTER	P 3x396	1
3	30.ER273-474	2	SKLUZ / SLIDE / RUTSCH	P 1,5x145	1
4	30.ER303-373	0	BOCNICE / SIDE PLATE / SEITENTEIL		1
5	90.001.25.015	0	SROUB IMBUS / ALLEN HEAD BOLT / IMBUSSCHRAUBE	M6X10	6
6	90.001.25.016 (1)	0	SROUB IMBUS / ALLEN HEAD BOLT / IMBUSSCHRAUBE	M6X12	2
7	90.001.25.046	0	SROUB IMBUS / ALLEN HEAD BOLT / IMBUSSCHRAUBE	M10X20	2
8	90.013.27.003	0	SROUB / BOLT / SCHRAUBE	M5X10	2
9	90.101.55.008 (1)	0	MATICE / NUT / MUTTER	MATICE M6	2
10	90.150.50.004	0	PODLOZKA / WASHER / UNTERLEGSCHEIBE	PODLOZKA 6,4	6
11	90.150.50.006	0	PODLOZKA / WASHER / UNTERLEGSCHEIBE	PODLOZKA 10,5	2

1.PR.2xSROUB 90.001.25.016;PR.2xMATICE 90.101.55.008. 071/ZM100 2.03.2020 KOSYK

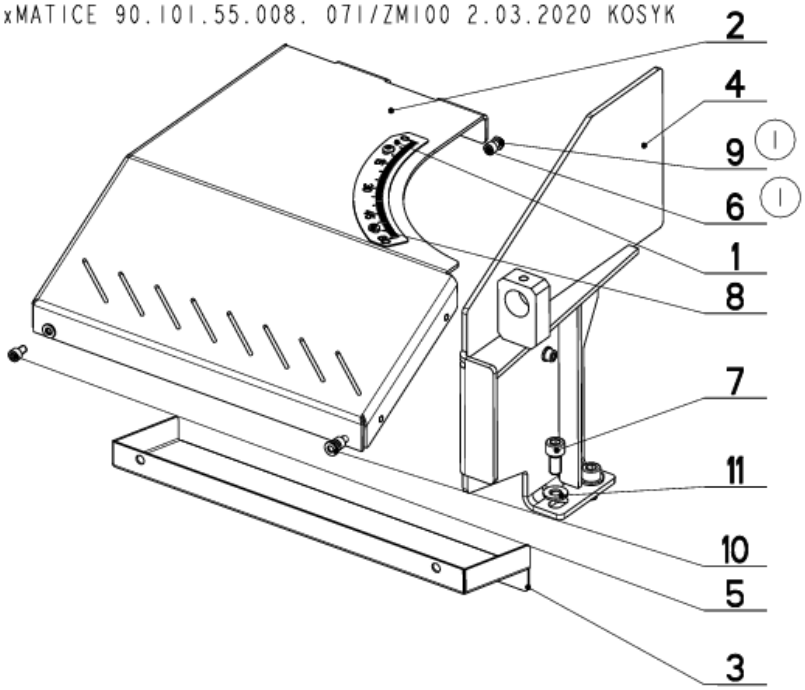

Cislo Sestavy/Number of assembly/Nummer der Baugruppe; Verze (Ver.)/Version/Version; Nazev sestavy/Assembly title/Name der Baugruppe; Pozice (Poz.)/Position/Position; Objednaci cislo/Purchase order number/Bestellnummer; Nazev polozky/Volume title/Name der Position; Rozmer/Stock size/Abmessung

7.34. Podstavec / Base / Untersatz

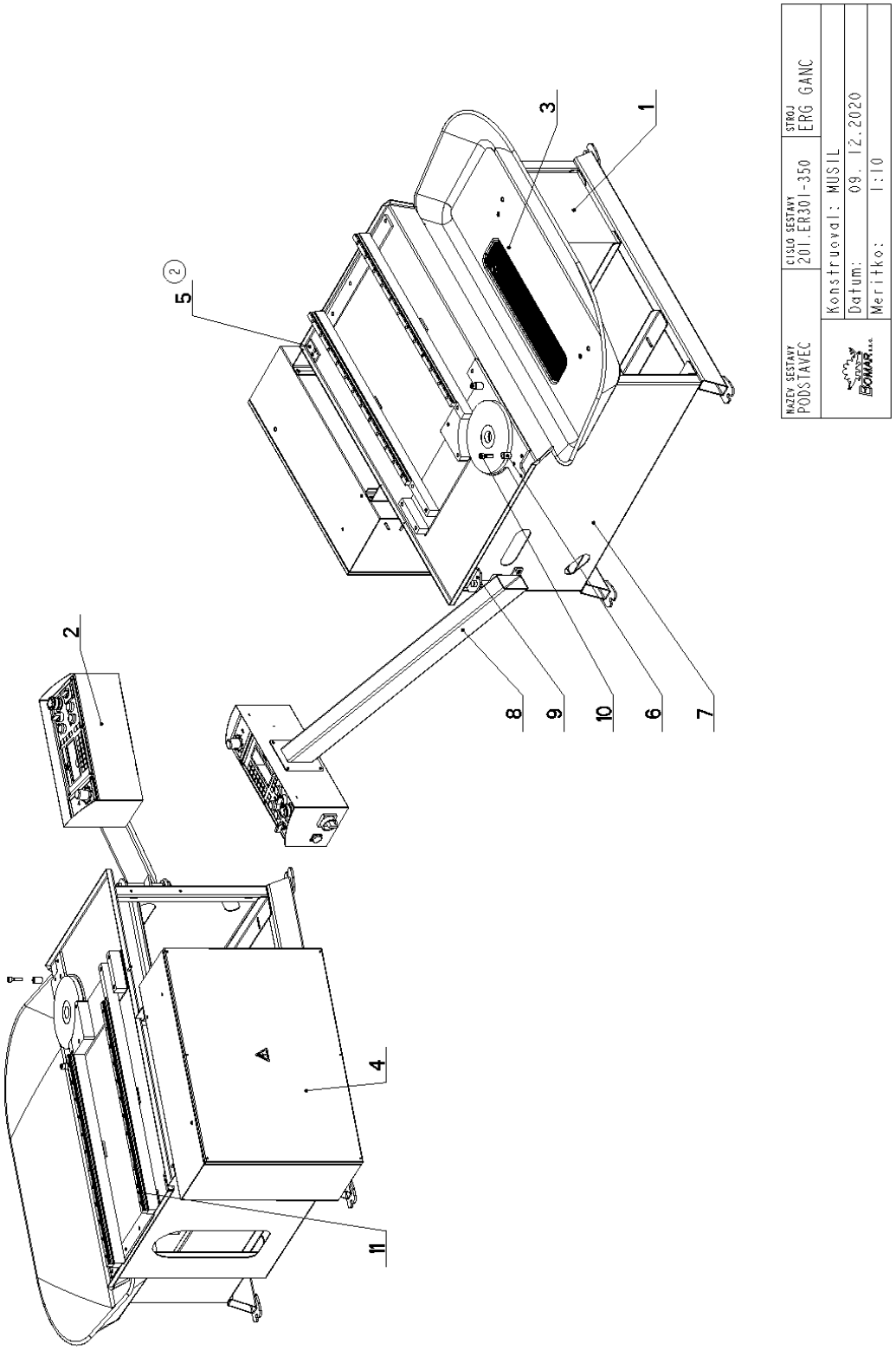

7.35. Kusovník / Piece list / Stückliste – Podstavec / Base / Untersatz

Cislo Sestavy	Ver.	Nazev sestavy
201.ER301-350	2	PODSTAVEC/BASE/UNTERSATZ

Poz.	Objednaci cislo	Ver.	Nazev polozky	Rozmer	Ks
1	201.0506-100	6	CHLAZENI / COOLING / KÜHLUNG		1
2	201.BC231-280	3	OVLADACI PANEL / CONTROL PANEL / BEDIENPULT		1
3	201.ER251-302	2	VANA / TANK / WANNE		1
4	201.ER313-340	0	ROZVADEC ELEKTRO / ELECTRO DISTRIBUTOR / SCHALTSCHRANK		1
5	30.7901-032 (2)	0	DRZAK / HOLDER / HALTER	HR 30x5	1
6	30.BC231-202	0	EXCENTR / CAM / EXZENTER	D 20	2
7	30.ER301-351	6	PODSTAVEC / BASE / UNTERSATZ		1
8	30.ER331-304	0	KONZOLA / CONSOLE / KONSOLE		1
9	30.M201-011	1	KONZOLA / CONSOLE / KONSOLE	P 6x74	2
10	90.001.25.049	0	SROUB IMBUS / ALLEN HEAD BOLT / IMBUSSCHRAUBE	M10X35	2
11	99.200.539	0	VEDENI LINEARNI / LINEAR GUIDE / LINEARE FUHRUNG	MSA 20A 720 30/30	2

1.ZRUS.PRUCHODKA 92.008.101. 222/ZM380 11.09.2019 KOSYK
2.PRIDANA DESKA 30.7901-032. 309/ZM373 9.12.2020 SLEZACKOVA

Cislo Sestavy/Number of assembly/Nummer der Baugruppe; Verze (Ver.)/Version/Version; Nazev sestavy/Assembly title/Name der Baugruppe; Pozice (Poz.)/Position/Position; Objednaci cislo/Purchase order number/Bestellnummer; Nazev polozky/Volume title/Name der Position; Rozmer/Stock size/Abmessung

7.36. Chlazení / Cooling / Kühlung

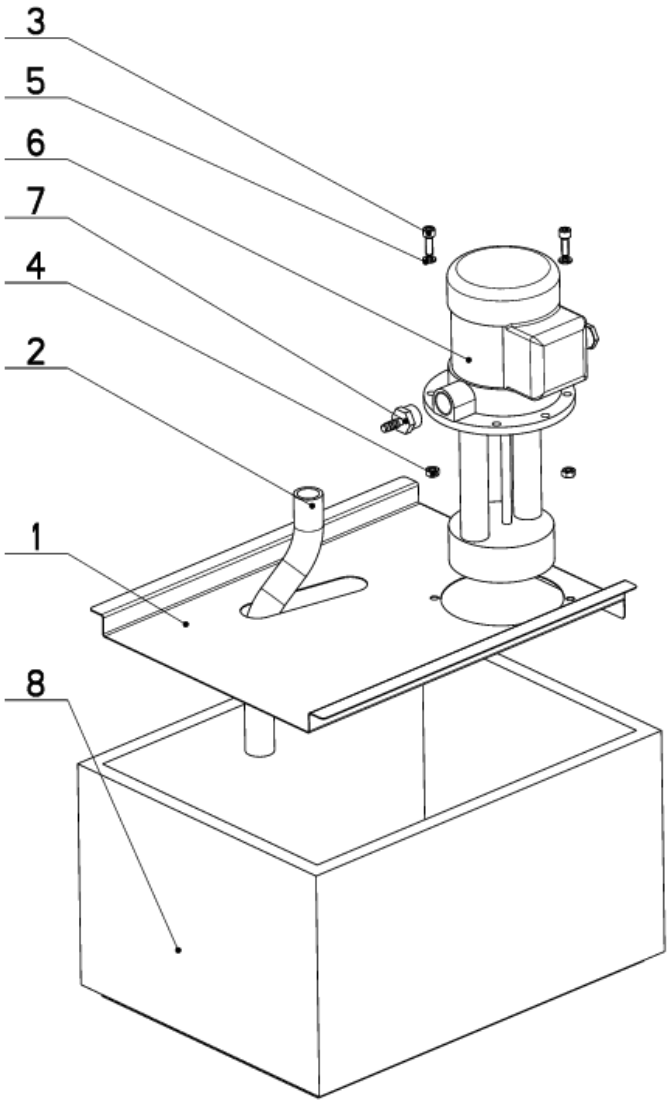

NAZEV SESTAVY	CISLO SESTAVY	STROJ
CHLAZENI	201.0506-100	ERGO250
BOMAR	Konstruoval: NEUMANN	
	Datum: 15. 08.2018	
	Meritko: 1:5	

Cislo Sestavy	Ver.	Nazev sestavy
201.0506-100	6	CHLAZENI/COOLING/KÜHLUNG

Poz.	Objednaci cislo	Ver.	Nazev polozky	Rozmer	Ks
1	30.8006-501 (5)	2	VIKO / COVER / DECKEL	P 0,8 x329	1
2	42.020.003	0	HADICE / HOSE / SCHLAUCH	19x3	1
3	90.001.25.076 (6)	0	SROUB IMBUS / ALLEN HEAD BOLT / IMBUSSCHRAUBE	M6X18	2
4	90.100.55.004 (6)	0	MATICE / NUT / MUTTER	MATICE _ M6	2
5	90.152.50.001 (6)	0	PODL VEJIROVA ZN / /	6.4	2
6	91.020.035 (4)	0	CERPADLO CHLAZENI / COOLING PUMP / KÜHLMITTELPUMPE	230/400V	1
7	94.202.020 (4)	0	REDUKCE / REDUCTION / ADAPTOR / REDUKTION	1/2"-6	1
8	94.403.003	0	NADRZ / CONTAINER / BEHALTER		1

1.ZRUS.CERPADLO 91.020.005 A NAHR.91.020.019,ZRUS.VIKO 30.0506-201 A NAHR.30.8006-301,ZRUS.SOUC.30.0506-003, 90.100.55.004,94.202.005,42.020.001,99.260.001,94.202.002. 299/ZM274 12.11.2013 SLEZACKOVA

2.PRIDANO SITO 30.8006-002. 024/ZM100 27.4.2016 SLEZACKOVA

3.ZRUSEN DRZAK 30.8006-002 A NAHR.30.ER251-014. 155/ZM281 16.9.2016 SLEZACKOVA

4.ZRUS.CERPADLO 91.020.019 A NAHR.91.020.035,ZRUS.VIKO 30.8006-301 A NAHR.30.8006-401,ZRUS.DRZAK 30.ER251-014, PRID.REDUKCE 94.202.020,4xPODLOZKA 6,4(90.152.50.001),4xMATICE M6(90.100.55.004),4xSROUB M6x18(90.001.25.076) 112/ZM151 19.4.2017 SLEZACKOVA

5.ZRUSENO VIKO 30.8006-401 A NAHR.30.8006-501.127/ZM172 10.5.2017 SLEZACKOVA

6.ZM. POCTU ZE 4 DILU SROUBENI NA 2: 90.001.25.076, 90.100.55.004, 90.152.50.001. 159/ZM284 15.8.2018 SZABARI

Cislo Sestavy/Number of assembly/Nummer der Baugruppe; Verze (Ver.)/Version/Version; Nazev sestavy/Assembly title/Name der Baugruppe; Pozice (Poz.)/Position/Position; Objednaci cislo/Purchase order number/Bestellnummer; Nazev polozky/Volume title/Name der Position; Rozmer/Stock size/Abmessung

7.38. Ovladací panel / Control panel / Bedienpult

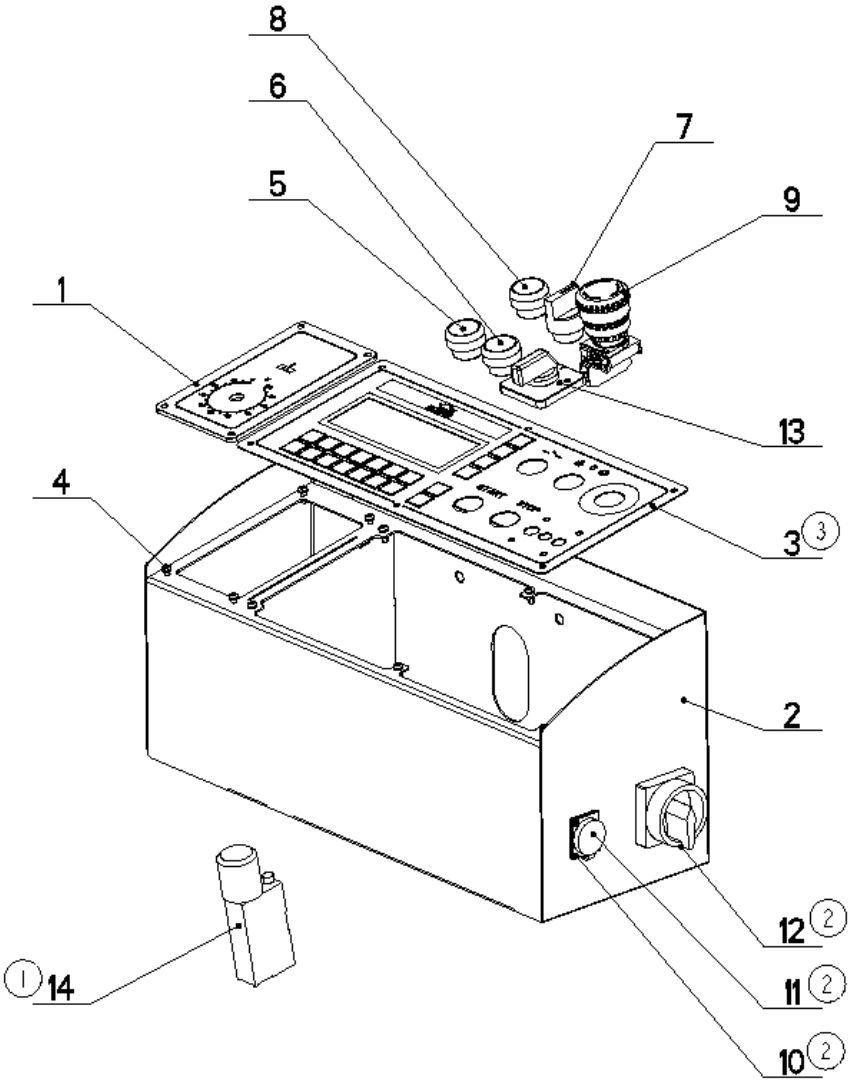

NAZEV SESTAVY	CISLO SESTAVY	STROJ
OVLADACI PANEL	201.BC231-280	BC230GAC

Konstruoval:	NEUMANN
Datum:	19. 03.2020
Meritko:	1:4

7.39. Kusovník / Piece list / Stückliste - Ovladací panel / Control panel / Bedienpult

Cislo Sestavy	Ver.	Nazev sestavy
201.BC231-280	3	OVLADACI PANEL/CONTROL PANEL/BEDIENPULT

Poz.	Objednaci cislo	Ver.	Nazev polozky	Rozmer	Ks
1	281.265	0	DESKA / BOARD / PLATTE		1
2	30.BC231-281	0	NOHA / LEG / STANDER		1
3	31.BC230-257 (3)	0	SAMOLEPKA / ELECTRO PANEL / PANEL	P 3x150	1
4	90.013.27.015	0	SROUB PULKULATY / HALF ROUND BOLT / HALBRUNDSCHRAUBE	M4x10	10
5	91.060.031	0	HLAVICE / HEAD / KOPF		1
6	91.060.035	0	HLAVICE / HEAD / KOPF		1
7	91.060.051	0	PREPINAC / SWITCH / UMSCHALTER		1
8	91.060.053	0	HLAVICE / HEAD / KOPF		1
9	91.060.084	0	TOTAL-STOP / TOTAL STOP / TOTALSTOPP	TOTAL STOP	1
10	91.141.110 (2)	0	KONEKTOR / CONNECTOR / STECKVERBINDER	USB	1
11	91.141.111 (2)	0	KONEKTOR / /		1
12	91.170.028 (2)	0	VYPINAC / SWITCH / SCHALTER	VYPINAC	1
13	91.171.006	0	SPINAC VACKOVY / CAM SWITCH / SCHALTER		1
14	92.152.001 (1)	0	VENTIL SKRTICI / CHOKE VALVE / DROSSELVENTIL	VS01-04/R 2.5-0	1

1. ZRUSEN VENTIL 92.153.013 A NAHRAZEN 92.152.001 140/ZM147 13.07.2018 NEDUCHAL
2.ZRUS.KONEKTOR 91.141.093 A NAHR.91.141.110 A 91.141.111;SOUC.91.170.018,91.180.015 A NAHR.91.170.028. 030/ZM040 31.1.2019 SCERBA
3.ZRUS.SAMOLEPKA 31.BC231-257 A NAHR.31.BC230-257. 080/ZM131 19.3.2020 SLEZACKOVA

Cislo Sestavy/Number of assembly/Nummer der Baugruppe; Verze (Ver.)/Version/Version; Nazev sestavy/Assembly title/Name der Baugruppe; Pozice (Poz.)/Position/Position; Objednaci cislo/Purchase order number/Bestellnummer; Nazev polozky/Volume title/Name der Position; Rozmer/Stock size/Abmessung

7.40. Deska / Board / Platte

Cislo Sestavy	Ver.	Nazev sestavy
281.265	0	DESKA/BOARD/PLATTE

Poz.	Objednaci cislo	Ver.	Nazev polozky	Rozmer	Ks
1	30.BC231-272	0	PLECH / PLATE / BLECH	P 3x86	1
2	31.BC231-273	0	SAMOLEPKA / STICKER / AUFKLEBER		1

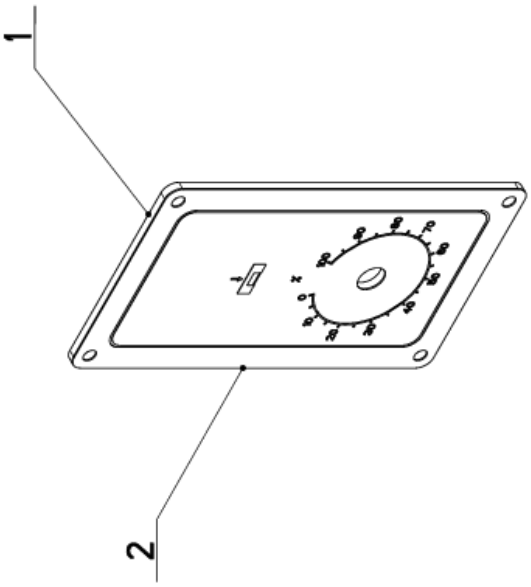

Cisla Sestavy/Number of assembly/Nummer der Baugruppe; Verze (Ver.)/Version/Version; Nazev sestavy/Assembly title/Name der Baugruppe; Pozice (Poz.)/Position/Position; Objednaci cislo/Purchase order number/Bestellnummer; Nazev polozky/Volume title/Name der Position; Rozmer/Stock size/Abmessung

7.41. Vana / Tank / Wanne

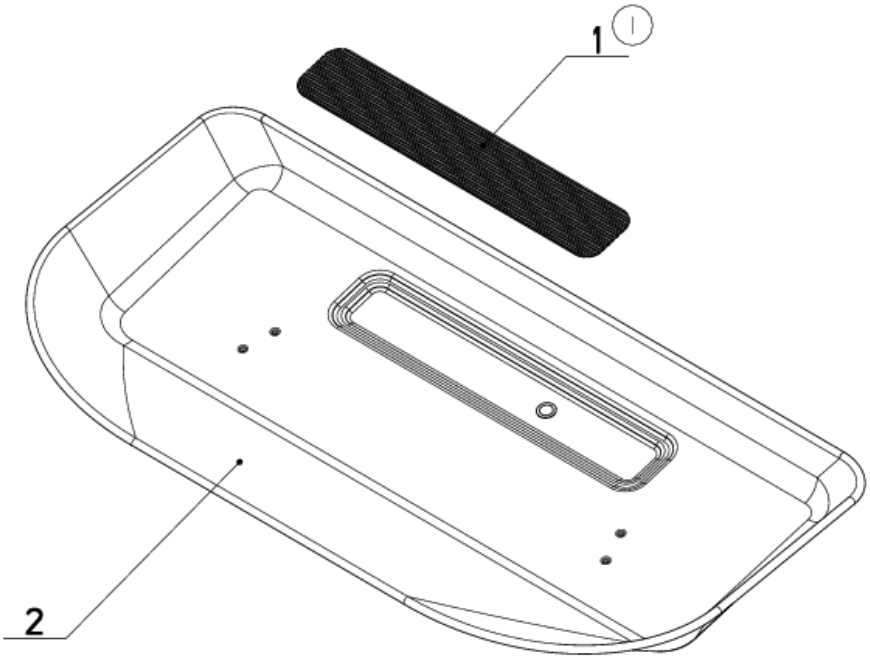

NAZEV SESTAVY	CISLO SESTAVY	STROJ
VANA	201.ER251-302	ERGO.250

Konstruoval:	FABER
Datum:	23. 10.2017
Meritko:	13:100

7.42. Kusovník / Piece list / Stückliste - Vana / Tank / Wanne

Cislo Sestavy	Ver.	Nazev sestavy
201.ER251-302	2	VANA/TANK/WANNE

Poz.	Objednaci cislo	Ver.	Nazev polozky	Rozmer	Ks
1	30.ER251-304 (1)	0	SITO / SIEVE / GITTERWERK	P1x95	1
2	30.ER251-305	1	VANA / TANK / WANNE		1

1.PRIDAN KROUZEK 20x2(96.002.046),PODLOZKA 20(90.167.00.001),ZRUS.VANA 31.ER251-302.1 A NAHR.30.ER251-305. 213/ZM177 9.6.2016 SLEZACKOVA

2.ZRUS.TRUBKA 30.ER251-303,PODLOZKA 90.167.00.001,KROUZEK 96.002.046. 265/ZM345 21.10.2016 SLEZACKOVA

Cislo Sestavy/Number of assembly/Nummer der Baugruppe; Verze (Ver.)/Version/Version; Nazev sestavy/Assembly title/Name der Baugruppe; Pozice (Poz.)/Position/Position; Objednaci cislo/Purchase order number/Bestellnummer; Nazev polozky/Volume title/Name der Position; Rozmer/Stock size/Abmessung

Cislo Sestavy	Ver.	Nazev sestavy
201.ER313-340	0	ROZVADEC ELEKTRO/ELECTRO DISTRIBUTOR/SCHALTSCHRANK

Poz.	Objednaci cislo	Ver.	Nazev polozky	Rozmer	Ks
1	30.ER313-341	0	ROZVADEC ELEKTRO / ELECTRO DISTRIBUTOR / SCHALTSCHRANK		1
2	30.ER313-342	0	VIKO / COVER / DECKEL		1
3	99.900.045	0	SAMOLEPKA / STICKER / AUFKLEBER		1
4	91.070.010	0	PRUCHODKA / LEADTHROUGH / DURCHFÜHRUNG	M12x1.5 CERNA	1
5	91.072.010	0	MATICE / NUT / MUTTER	M12x1,5	1
6	91.071.004	0	VYVODKA / BUSHING / TŮLLE	VYVODKA	4
7	91.072.007	0	MATICE / NUT / MUTTER	MATICE	4
8	30.ER313-343	0	PANEL / PANEL / PANEL	P 1.5x495	1

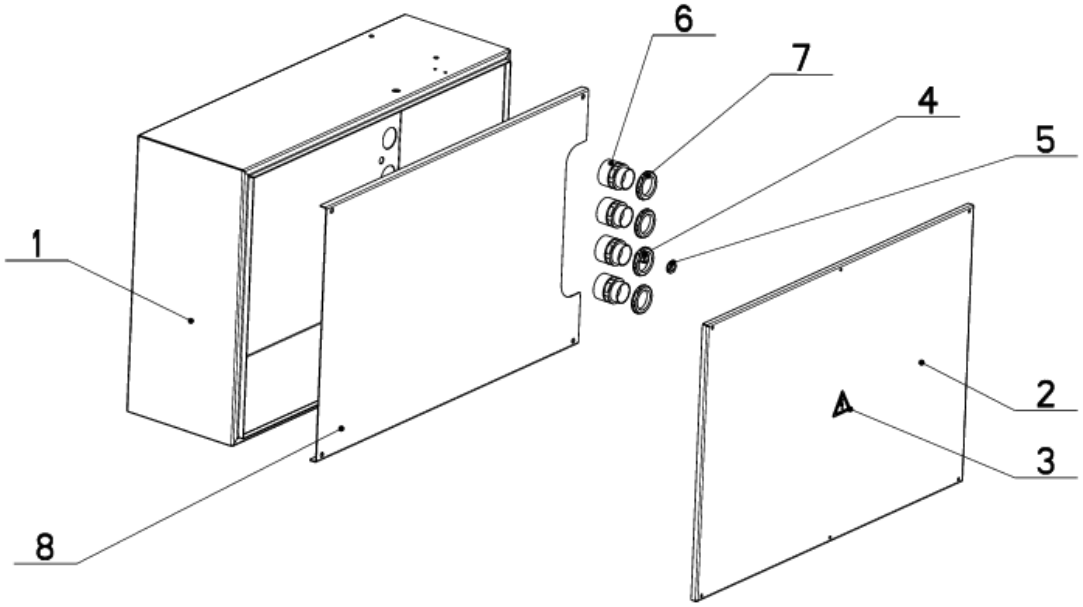

Cislo Sestavy/Number of assembly/Nummer der Baugruppe; Verze (Ver.)/Version/Version; Nazev sestavy/Assembly title/Name der Baugruppe; Pozice (Poz.)/Position/Position; Objednaci cislo/Purchase order number/Bestellnummer; Nazev polozky/Volume title/Name der Position; Rozmer/Stock size/Abmessung

7.44. Svěrák / Vice / Schraubstock

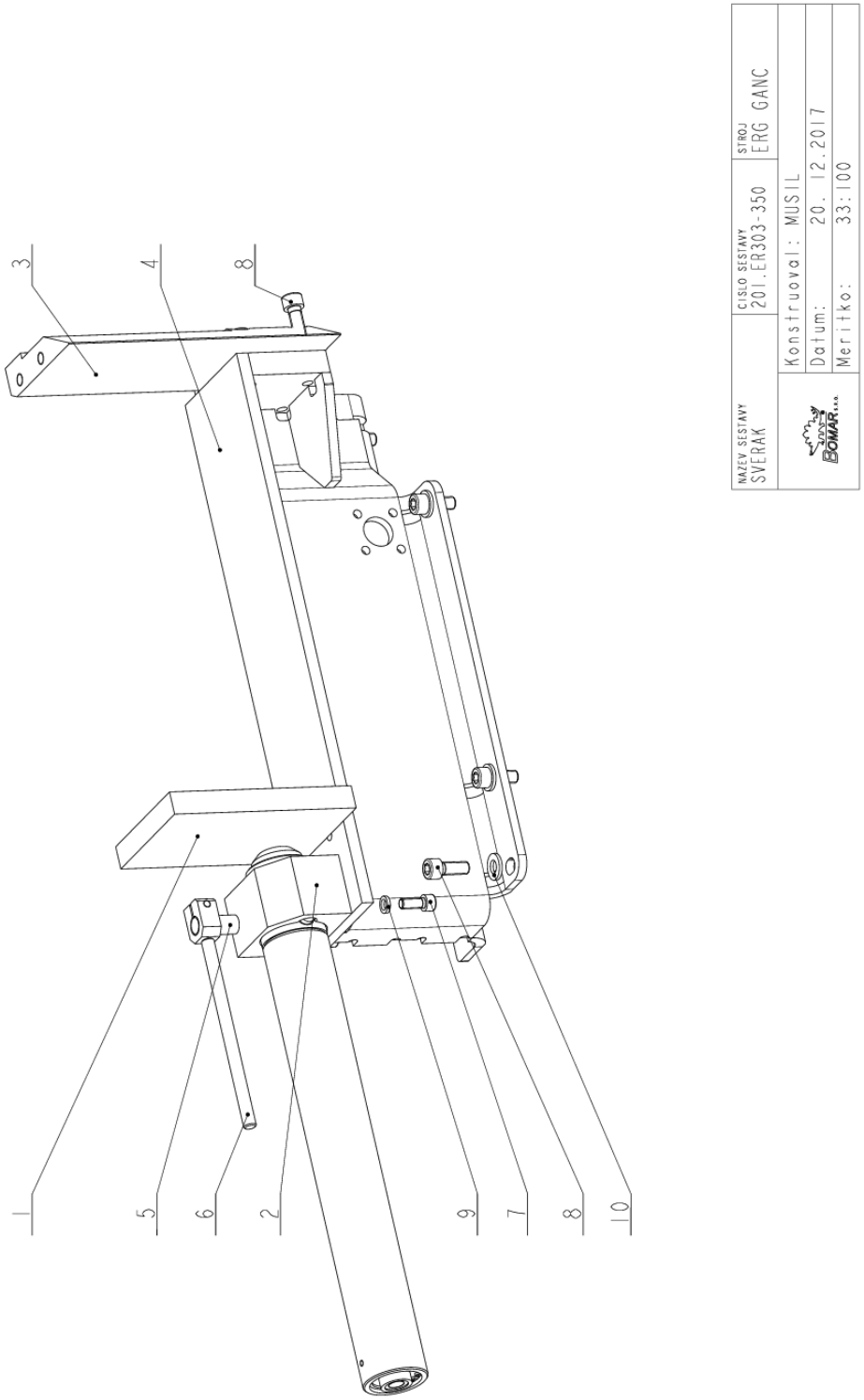

7.45. Kusovník / Piece list / Stückliste - Svěrák / Vice / Schraubstock

Cislo Sestavy	Ver.	Nazev sestavy
201.ER303-350	0	SVERAK/VICE/SCHRAUBSTOCK

Poz.	Objednaci cislo	Ver.	Nazev polozky	Rozmer	Ks
1	201.ER307-320	0	VALEC UPINACI / FIXING CYLINDER / SPANNZYLINDER		1
2	30.BC233-306	0	DRZAK / HOLDER / HALTER	TYC 80x50	1
3	30.ER303-305	0	CELIST / JAW / BACKE	HR 110x30	1
4	30.ER303-351	0	SVERAK / VICE / SCHRAUBSTOCK		1
5	30.ER303-359	0	PAKA / LEVER / HEBEL	D 15	1
6	30.ER311-376	0	PAKA UPINACI / ATTACHMENT LEVER / SPANNHEBEL		1
7	90.001.25.032	0	SROUB IMBUS / ALLEN HEAD BOLT / IMBUSSCHRAUBE	8x20	4
8	90.001.25.047	0	SROUB IMBUS / ALLEN HEAD BOLT / IMBUSSCHRAUBE	M10X25	11
9	90.163.00.001	0	PODLOZKA / WASHER / UNTERLEGSCHEIBE	NORD-LOCK	8
10	90.163.00.011	0	PODLOZKA / WASHER / UNTERLEGSCHEIBE	NORD-LOCK	7

Cislo Sestavy/Number of assembly/Nummer der Baugruppe; Verze (Ver.)/Version/Version; Nazev sestavy/Assembly title/Name der Baugruppe; Pozice (Poz.)/Position/Position; Objednaci cislo/Purchase order number/Bestellnummer; Nazev polozky/Volume title/Name der Position; Rozmer/Stock size/Abmessung

7.46. Válec upínací / Fixing cylinder / Spannzylinder

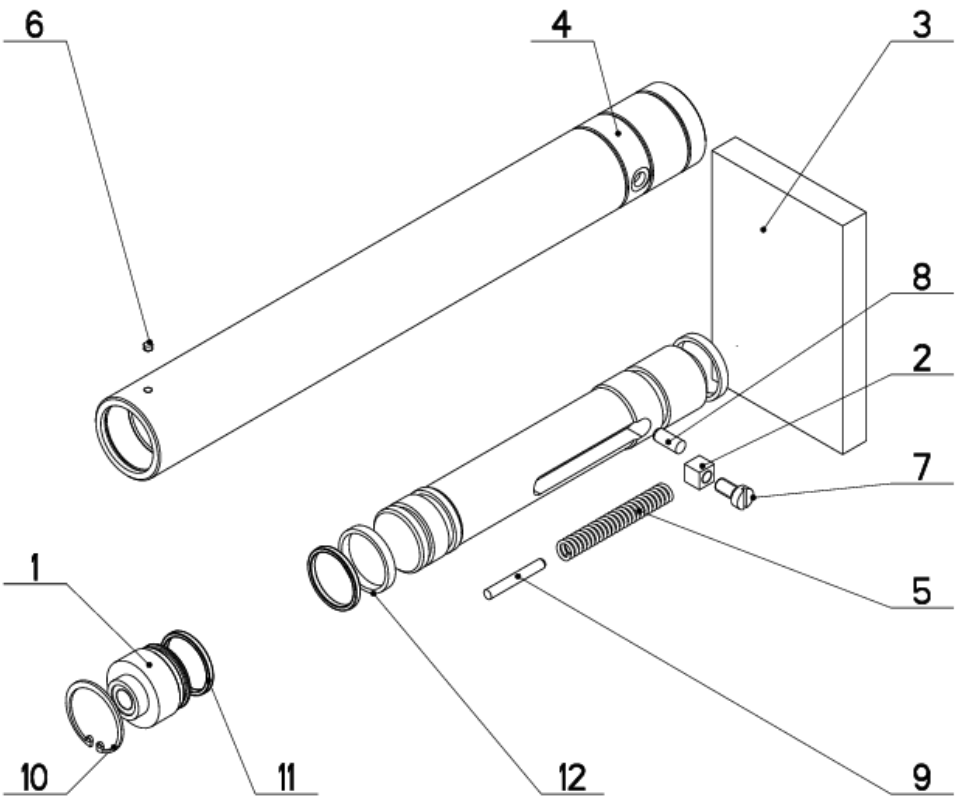

NAZEV SESTAVY	CISLO SESTAVY	STROJ
VALEC UPINACI	201.ER307-320	ERG300

Konstruoval:	MUSIL
Datum:	29. 03.2017
Meritko:	3:10

7.47. Kusovník / Piece list / Stückliste - Válec upínací / Fixing cylinder / Spannzylinder

Cislo Sestavy	Ver.	Nazev sestavy
201.ER307-320	0	VALEC UPINACI/FIXING CYLINDER/SPANNZYLINDER

Poz.	Objednaci cislo	Ver.	Nazev polozky	Rozmer	Ks
1	30.2107-203	0	VIKO / COVER / DECKEL	d 45	1
2	30.2107-205	0	DORAZ / STOP PIECE / ANSCHLAG	HR12	1
3	30.ER307-321	0	CELIST / JAW / BACKE		1
4	30.ER307-322	0	VALEC / ROLLER / ZYLINDER	TR 52/42	1
5	31.2107-206	0	PRUZINA / SPRING / FEDER	2x12x84x25,5	1
6	90.003.2D.001	0	SROUB STAVECI / ADJUSTMENT BOLT / STELLSCHRAUBE	SROUB M5X6	1
7	90.012.50.012	0	SR. S VALC. HLAV. / ROLLER BOLT / ZYLINDERSCHRAUBE	SROUB M8X16	1
8	90.301.0Z.008	0	KOLIK VALCOVY / CYLINDRICAL PIN SOFT / ZYLINDERSTIFT WEICH	KOLIK 8X20	1
9	90.301.0Z.017	0	KOLIK VALCOVY / CYLINDRICAL PIN SOFT / ZYLINDERSTIFT WEICH	KOLIK 6X45	1
10	95.801.006	0	SEGR DIRA / INSIDE SAFETY RING / SICHERUNGSRING INNEN	POJISTNY KROUZEK 42	1
11	96.002.017	0	KROUZEK O DYNAMICKY / DYNAMIC O RING / O-RING DYNAMISCH	34x3 NBR 70SH	2
12	96.084.010		KROUZEK VODICI / LEAD RING / FÜHRUNGSRING	GP6500400-T47	2

Cislo Sestavy/Number of assembly/Nummer der Baugruppe; Verze (Ver.)/Version/Version; Nazev sestavy/Assembly title/Name der Baugruppe; Pozice (Poz.)/Position/Position; Objednaci cislo/Purchase order number/Bestellnummer; Nazev polozky/Volume title/Name der Position; Rozmer/Stock size/Abmessung

7.48. Trať / Track / Bahn

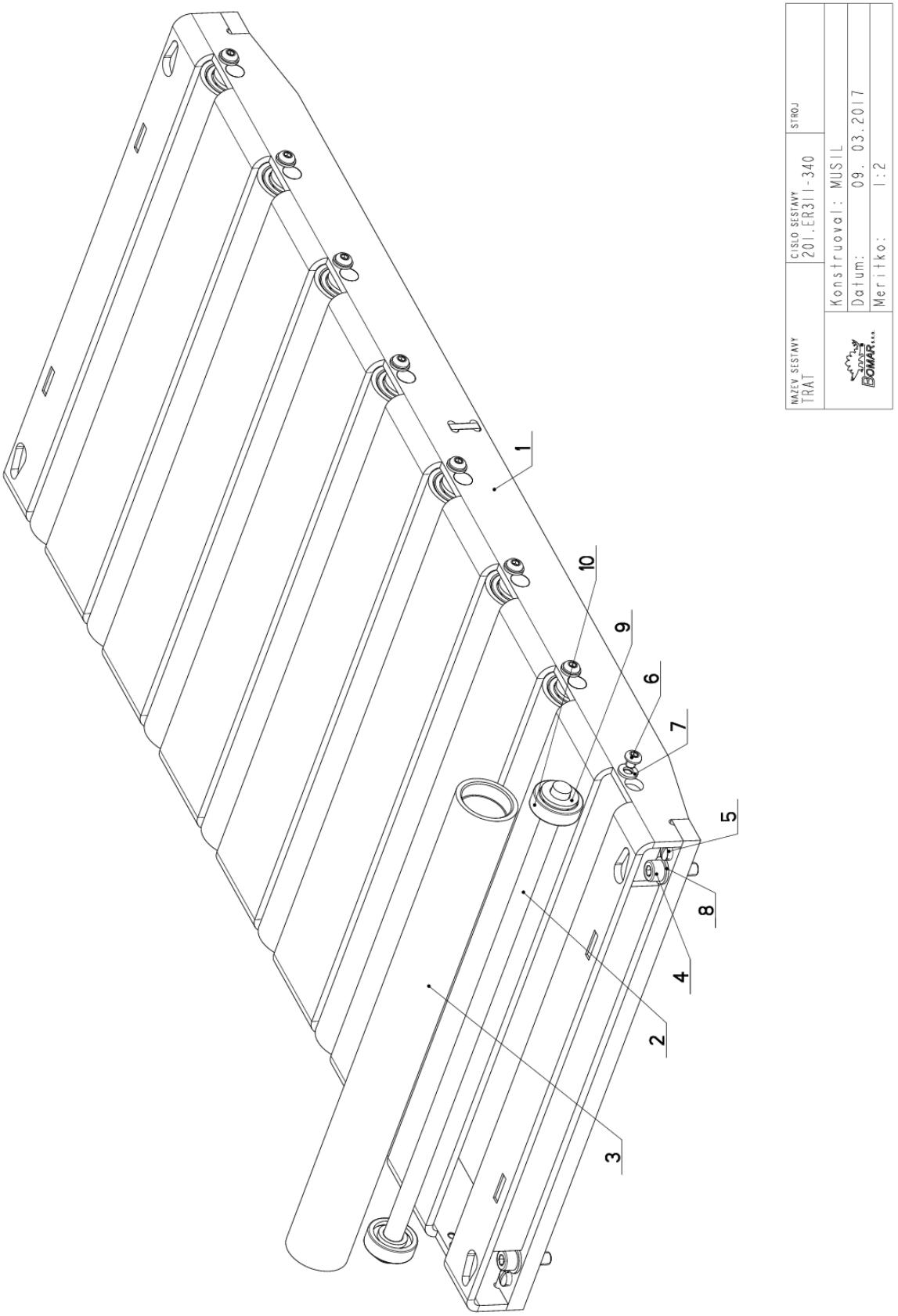

7.49. Kusovník / Piece list / Stückliste - Trať / Track / Bahn

Cislo Sestavy	Ver.	Nazev sestavy
201.ER311-340	0	TRAT/TRACK/BAHN

Poz.	Objednaci cislo	Ver.	Nazev polozky	Rozmer	Ks
1	30.ER311-341	0	TRAT / TRACK / BAHN		1
2	30.ER311-342	0	TYC / POLE / STANGE	D 12	8
3	30.ER311-343	0	VALECEK / CYLINDER / ROLLE	TR 40x5	8
4	90.001.25.033	0	SROUB IMBUS / ALLEN HEAD BOLT / IMBUSSCHRAUBE	8x25	4
5	90.002.2D.015	0	SROUB STAVECI / ADJUSTMENT BOLT / STELLSCHRAUBE	SROUB M10X20	4
6	90.013.27.024	0	SROUB PULKULATY / HALF ROUND BOLT / HALBRUNDSCHRAUBE	M6x6	16
7	90.150.50.004	0	PODLOZKA / WASHER / UNTERLEGSCHEIBE	PODLOZKA 6,4	16
8	90.150.50.005	0	PODLOZKA / WASHER / UNTERLEGSCHEIBE	PODLOZKA 8,4	4
9	90.150.50.007	0	PODLOZKA / WASHER / UNTERLEGSCHEIBE	PODLOZKA 13	16
10	95.001.028	0	LOZISKO / BEARING / LAGER	6201 2RS	16

Cislo Sestavy/Number of assembly/Nummer der Baugruppe; Verze (Ver.)/Version/Version; Nazev sestavy/Assembly title/Name der Baugruppe; Pozice (Poz.)/Position/Position; Objednaci cislo/Purchase order number/Bestellnummer; Nazev polozky/Volume title/Name der Position; Rozmer/Stock size/Abmessung

7.50. Podavač / Feeder / Vorschub

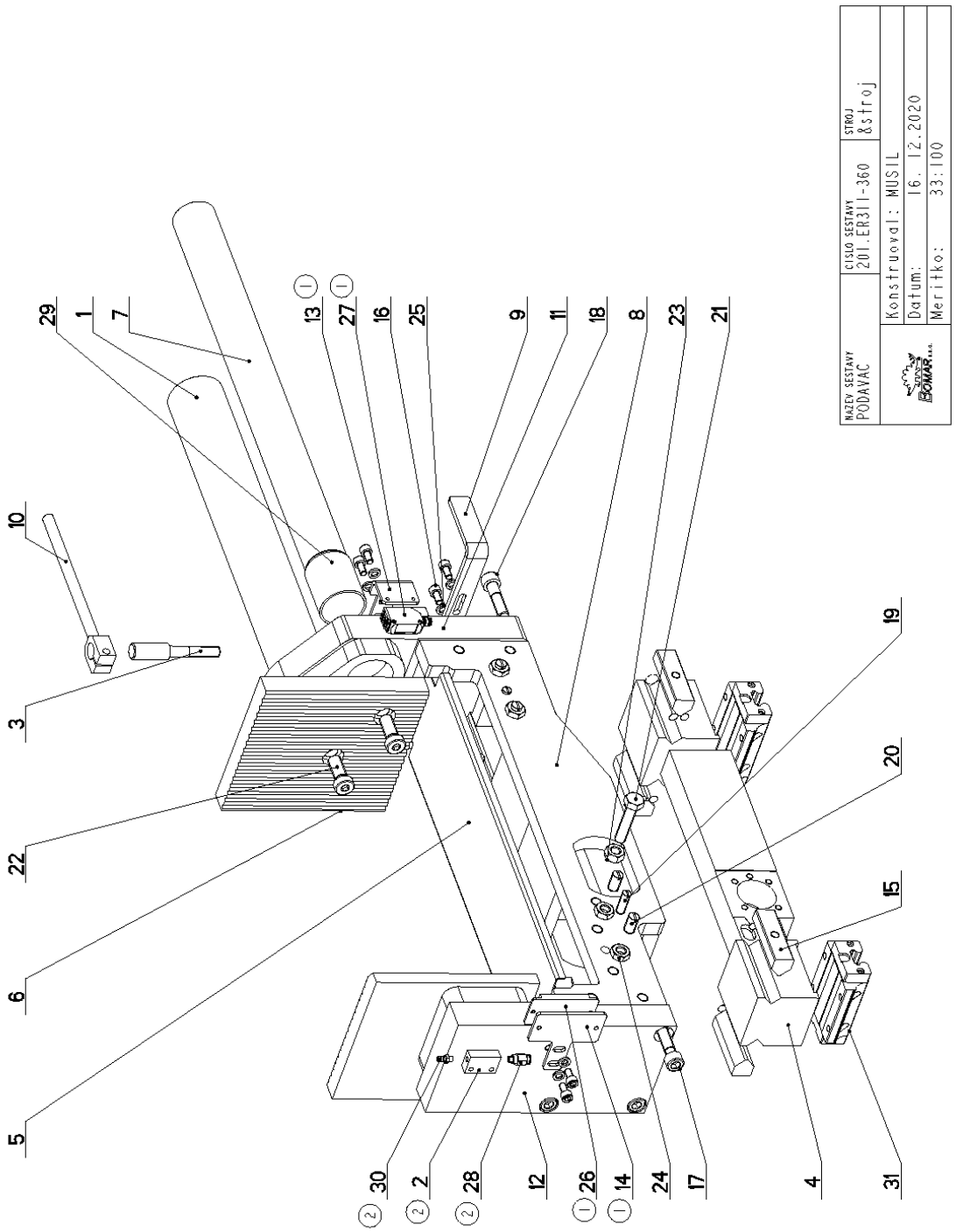

Cislo Sestavy	Ver.	Nazev sestavy
201.ER311-360	2	PODAVAC/FEEDER/VORSCHUB

Poz.	Objednaci cislo	Ver.	Nazev polozky	Rozmer	Ks
1	201.ER307-330	0	VALEC UPINACI / FIXING CYLINDER / SPANNZYLINDER		1
2	30.6611-504 (2)	0	KOSTKA / CUBE / WÜRFEL	HR 20x10	1
3	30.ER303-359	0	PAKA / LEVER / HEBEL	D 15	1
4	30.ER311-352	2	VOZIK / CART / WAGEN		1
5	30.ER311-355	0	KRYT / COVER / ABDECKUNG	P 1x122	1
6	30.ER311-356	0	DESKA / BOARD / PLATTE	HR 150x20	1
7	30.ER311-357	0	HRIDEL / SHAFT / WELLE	D 40	1
8	30.ER311-361	1	PODAVAC / FEEDER / VORSCHUB		1
9	30.ER311-366	0	DORAZ / STOP PIECE / ANSCHLAG	P 5x20	1
10	30.ER311-376	0	PAKA UPINACI / ATTACHMENT LEVER / SPANNHEBEL		1
11	30.ER311-377	0	DESKA / BOARD / PLATTE		1
12	30.ER311-379	0	CELIST PEVNA / SOLID JAW / FESTE BACKE		1
13	30.ER311-396 (1)	0	DRZAK / HOLDER / HALTER	P 3x36	1
14	30.ER311-397 (1)	0	DRZAK / HOLDER / HALTER	P 3x68	1
15	30.R211-004	0	VEDENI / GUIDE / BACKENFÜHRUNG	TYC 20x20	4
16	90.001.25.016	0	SROUB IMBUS / ALLEN HEAD BOLT / IMBUSSCHRAUBE	M6X12	6
17	90.001.25.049	0	SROUB IMBUS / ALLEN HEAD BOLT / IMBUSSCHRAUBE	M10X35	5
18	90.001.25.050	0	SROUB IMBUS / ALLEN HEAD BOLT / IMBUSSCHRAUBE	M10X40	4
19	90.002.20.013	0	SROUB STAVECI / ADJUSTMENT BOLT / STELLSCHRAUBE	SROUB M8X25	4
20	90.002.20.015	0	SROUB STAVECI / ADJUSTMENT BOLT / STELLSCHRAUBE	SROUB M10X20	4
21	90.005.55.027	0	SROUB 6HRANNY / 6 SIDED BOLT / SECHSKANTSCHRAUBE	SROUB M10X45	1
22	90.015.25.023	0	SROUB IMBUS / ALLEN HEAD BOLT / IMBUSSCHRAUBE	M12X30	2
23	90.100.55.006	0	MATICE / NUT / MUTTER	MATICE _ M10	1
24	90.101.55.002	0	MATICE / NUT / MUTTER	MATICE M10	4
25	90.163.00.012	0	PODLOZKA / WASHER / UNTERLEGSCHEIBE	NORD-LOCK	6
26	91.175.015 (1)	0	ODRAZKA / STUB / RUCKSTRAHLER	E20452	1
27	91.401.032 (1)	0	ZAVORA OPTICKA / /	O6P203	1
28	93.006.007 (2)	0	PNEUMATIKA / PNEUMATICS / PNEUMATIK		1
29	95.700.007	0	POUZDRO / SLEEVE / BÜCHSE	40X50	1
30	95.860.001 (2)	0	HLAVICE MAZACI / HEAD / KOPF	KM5	1
31	99.201.062	0	VOZIK LINEARNIHO VEDENI / LINEAR GUIDE CART / LINEARFUHRUNGSWAGEN	MSA20LE SS F0 N	2

1. ZRUSEN SNIMAC 91.400.067 A NAHR. ZAVOROU 91.401.032 A ODRAZKOU 91.175.015; ZRUSENY DESKY 30.ER311-365 A NAHR. DRZAKY 30.ER311-396 A 30.ER311-397. 294/ZM401 30.09.2019 BENDA
2.PRID.MAZNICE 95.860.001;KOSTKA 30.6611-50;SROUBENI 93.006.007. 277/ZM378 16.12.2020 SLEZACKOVA

Cislo Sestavy/Number of assembly/Nummer der Baugruppe; Verze (Ver.)/Version/Version; Nazev sestavy/Assembly title/Name der Baugruppe; Pozice (Poz.)/Position/Position;
Objednaci cislo/Purchase order number/Bestellnummer; Nazev polozky/Volume title/Name der Position; Rozmer/Stock size/Abmessung

7.52. Válec upínací / Fixing cylinder / Spannzylinder

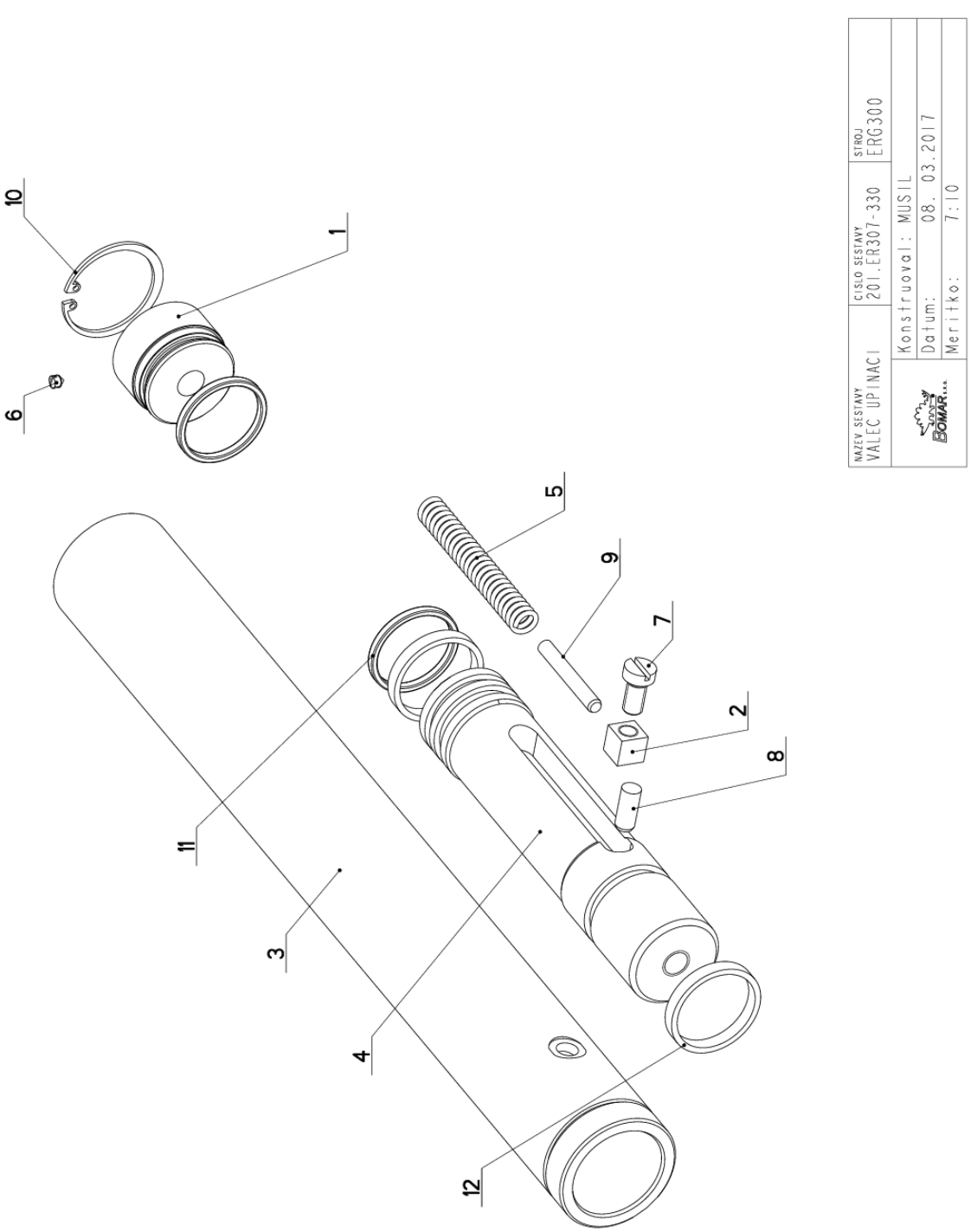

7.53. Kusovník / Piece list / Stückliste - Válec upínací / Fixing cylinder / Spannzylinder

Cislo Sestavy	Ver.	Nazev sestavy
201.ER307-330	0	VALEC UPINACI/FIXING CYLINDER/SPANNZYLINDER

Poz.	Objednaci cislo	Ver.	Nazev polozky	Rozmer	Ks
1	30.2107-203	0	VIKO / COVER / DECKEL	d 45	1
2	30.2107-205	0	DORAZ / STOP PIECE / ANSCHLAG	HR12	1
3	30.ER307-322	0	VALEC / ROLLER / ZYLINDER	TR 52/42	1
4	30.ER307-332	0	PISTNICE / PISTON ROD / KOLBENSTANGE	d 40	1
5	31.2107-206	0	PRUZINA / SPRING / FEDER	2x12x84x25,5	1
6	90.003.2D.001	0	SROUB STAVECI / ADJUSTMENT BOLT / STELLSCHRAUBE	SROUB M5X6	1
7	90.012.50.012	0	SR. S VALC. HLAV. / ROLLER BOLT / ZYLINDERSCHRAUBE	SROUB M8X16	1
8	90.301.0Z.008	0	KOLIK VALCOVY / CYLINDRICAL PIN SOFT / ZYLINDERSTIFT WEICH	KOLIK 8X20	1
9	90.301.0Z.017	0	KOLIK VALCOVY / CYLINDRICAL PIN SOFT / ZYLINDERSTIFT WEICH	KOLIK 6X45	1
10	95.801.006	0	SEGR DIRA / INSIDE SAFETY RING / SICHERUNGSRING INNEN	POJISTNY KROUZEK 42	1
11	96.002.017	0	KROUZEK O DYNAMICKY / DYNAMIC O RING / O-RING DYNAMISCH	34x3 NBR 70SH	2
12	96.084.010	0	KROUZEK VODICI / LEAD RING / FÜHRUNGSRING	GP6500400-T47	2

Cislo Sestavy/Number of assembly/Nummer der Baugruppe; Verze (Ver.)/Version/Version; Nazev sestavy/Assembly title/Name der Baugruppe; Pozice (Poz.)/Position/Position; Objednaci cislo/Purchase order number/Bestellnummer; Nazev polozky/Volume title/Name der Position; Rozmer/Stock size/Abmessung

7.54. Pohon / Drive / Antieb

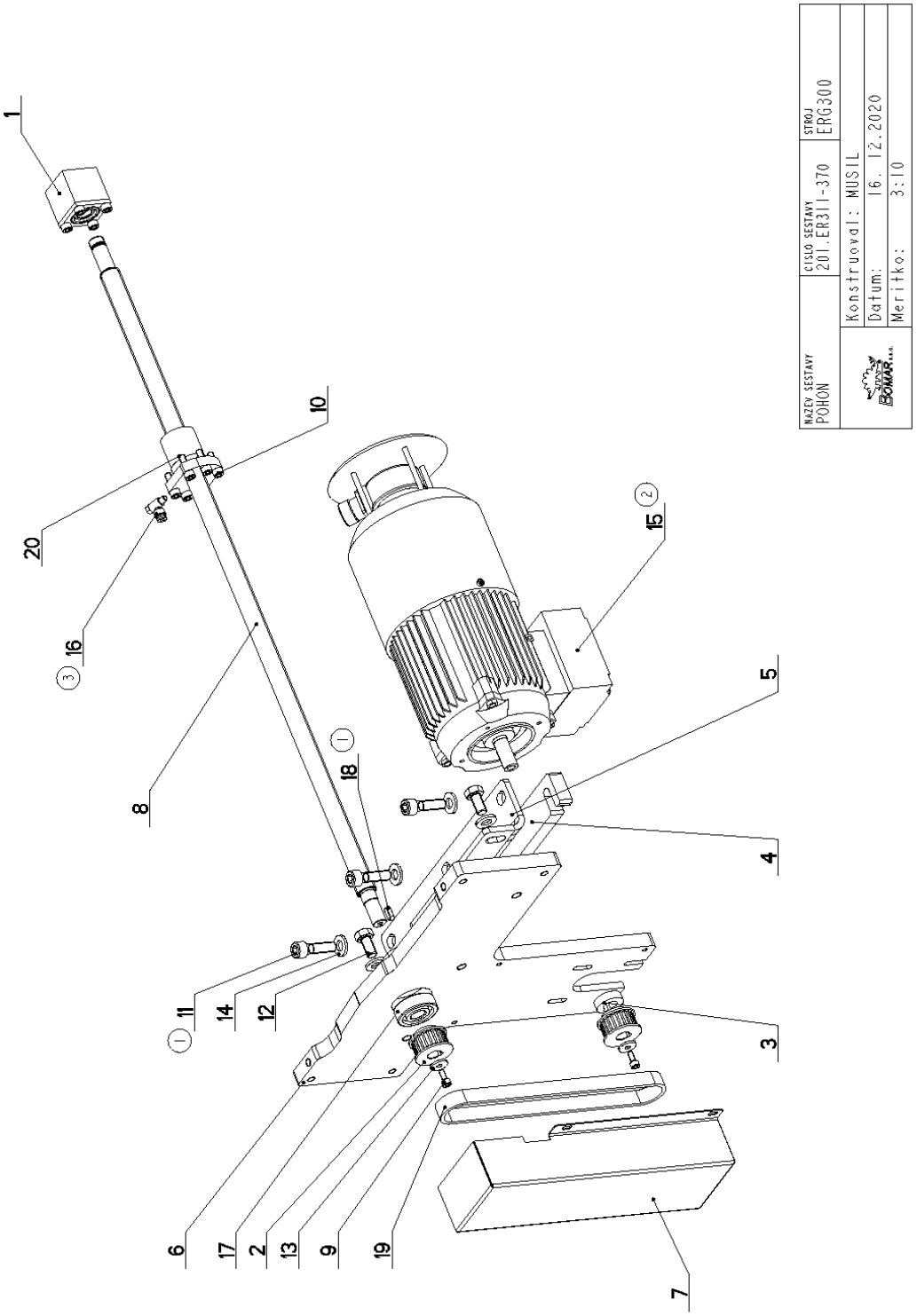

7.55. Kusovník / Piece list / Stückliste - Pohon / Drive / Antieb

Cislo Sestavy	Ver.	Nazev sestavy
201.ER311-370	3	POHON/DRIVE /ANTRIEB

Poz.	Objednaci cislo	Ver.	Nazev polozky	Rozmer	Ks
1	201.ER311-390	0	LOZISKO / BEARING / LAGER		1
2	30.2303-313	0	REMENICE / PULLEY / RIEMENSCHEIBE	22-5M-15 HTD	2
3	30.ER311-315	0	KROUZEK / RING / RING	P 8x28	1
4	30.ER311-316	0	PODLOZKA / WASHER / UNTERLEGSCHEIBE	P 15x35	1
5	30.ER311-318	1	DRZAK / HOLDER / HALTER	P 6x97	1
6	30.ER311-371	0	CELO / HEAD / STIRN	P 15x318	1
7	30.ER311-374	0	KRYT / COVER / ABDECKUNG	P 1x217	1
8	31.ER311-312	0	SROUB / BOLT / SCHRAUBE	SROUB 20x5	1
9	90.001.25.008	0	SROUB IMBUS / ALLEN HEAD BOLT / IMBUSSCHRAUBE	M5X12	2
10	90.001.25.018	0	SROUB IMBUS / ALLEN HEAD BOLT / IMBUSSCHRAUBE	M6X20	6
11	90.001.25.049 (1)	0	SROUB IMBUS / ALLEN HEAD BOLT / IMBUSSCHRAUBE	M10X35	3
12	90.005.55.023	0	SROUB 6HRANNY / 6 SIDED BOLT / SECHSKANTSCHRAUBE	SROUB M10X20	3
13	90.151.50.006	0	PODLOZKA / WASHER / UNTERLEGSCHEIBE	PODLOZKA 5	2
14	90.163.00.011	0	PODLOZKA / WASHER / UNTERLEGSCHEIBE	NORD-LOCK	6
15	91.001.389 (2)	0	ELEKTROMOTOR / ELECTRIC MOTOR / ELEKTROMOTOR		1
16	93.008.005 (3)	0	SROUBENI UHLOVE / ANGLE BOLTING / WINKELVERSCHRAUBUNG	SROUBENI UHL.NATAC.KOVOVE	1
17	95.001.023	0	LOZISKO / BEARING / LAGER	6302 2RS	1
18	95.810.019 (1)	0	PERO TESNE / TIGHT SPRING / PASSFEDER	PERO 5X5X14	1
19	99.024.025	0	REMEN OZUBENY / COG BELT / ZAHNRIEMEN	HTD 550-5M 5=15	1
20	99.212.046	0	MATICE / NUT / MUTTER	R20-05T4-FSIDIN	1

1.PRIDANO .PERO 5x5x14(85.810.019),ZRUS.SROUB M10x25(90.001.25.047) A NAHR.M10x35(90.001.25.049).
III/ZM211 27.6.2018 SLEZACKOVA
2.ZRUSEN ELEKTROMOTOR 91.001.009 A NAHRAZEN 91.001.389. 353/ZM480 10.12.2019 SLEZACKOVA
3.PRIDANO SROUBENI 93.008.005. 277/ZM378 16.12.2020 SLEZACKOVA

Cislo Sestavy/Number of assembly/Nummer der Baugruppe; Verze (Ver.)/Version/Version; Nazev sestavy/Assembly title/Name der Baugruppe; Pozice (Poz.)/Position/Position;
Objednaci cislo/Purchase order number/Bestellnummer; Nazev polozky/Volume title/Name der Position; Rozmer/Stock size/Abmessung

Cislo Sestavy	Ver.	Nazev sestavy
201.ER311-390	0	LOZISKO/BEARING/LAGER

Poz.	Objednaci cislo	Ver.	Nazev polozky	Rozmer	Ks
1	30.ER311-391	0	KOSTKA / CUBE / WÜRFEL	HR 40x40	1
2	30.ER311-392	0	VIKO / COVER / DECKEL	HR 40x40	1
3	30.ER311-393	0	KROUZEK / RING / RING	TR 35x2	1
4	30.ER311-394	0	KROUZEK / RING / RING	TR 25x5	1
5	30.ER311-395	0	KROUZEK / RING / RING	D 20	1
6	90.001.25.016	0	SROUB IMBUS / ALLEN HEAD BOLT / IMBUSSCHRAUBE	M6X12	4
7	95.001.043	0	LOZISKO / BEARING / LAGER	7202 B	2
8	95.830.069	0	GUFERO / GIT SEAL / DICHTUNG	GUFERO 20X30X7	1
9	95.850.003	0	MATICE KM / KM NUT / KM-MUTTER	KM2	1
10	95.855.009	0	PODLOZKA / WASHER / UNTERLEGSCHEIBE	POJISTNA PODLOZKA MB2	1

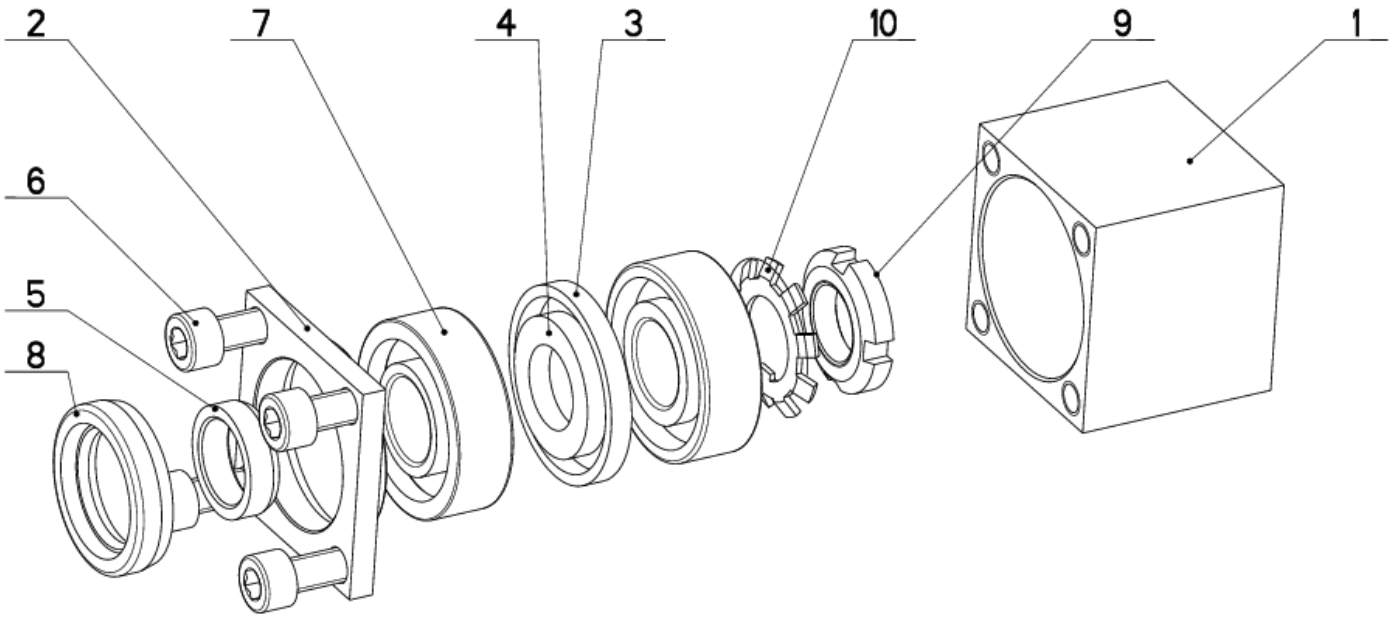

Cislo Sestavy/Number of assembly/Nummer der Baugruppe; Verze (Ver.)/Version/Version; Nazev sestavy/Assembly title/Name der Baugruppe; Pozice (Poz.)/Position/Position; Objednaci cislo/Purchase order number/Bestellnummer; Nazev polozky/Volume title/Name der Position; Rozmer/Stock size/Abmessung

7.57. Upínání horní / Top clam / Spannvorrichtung oben

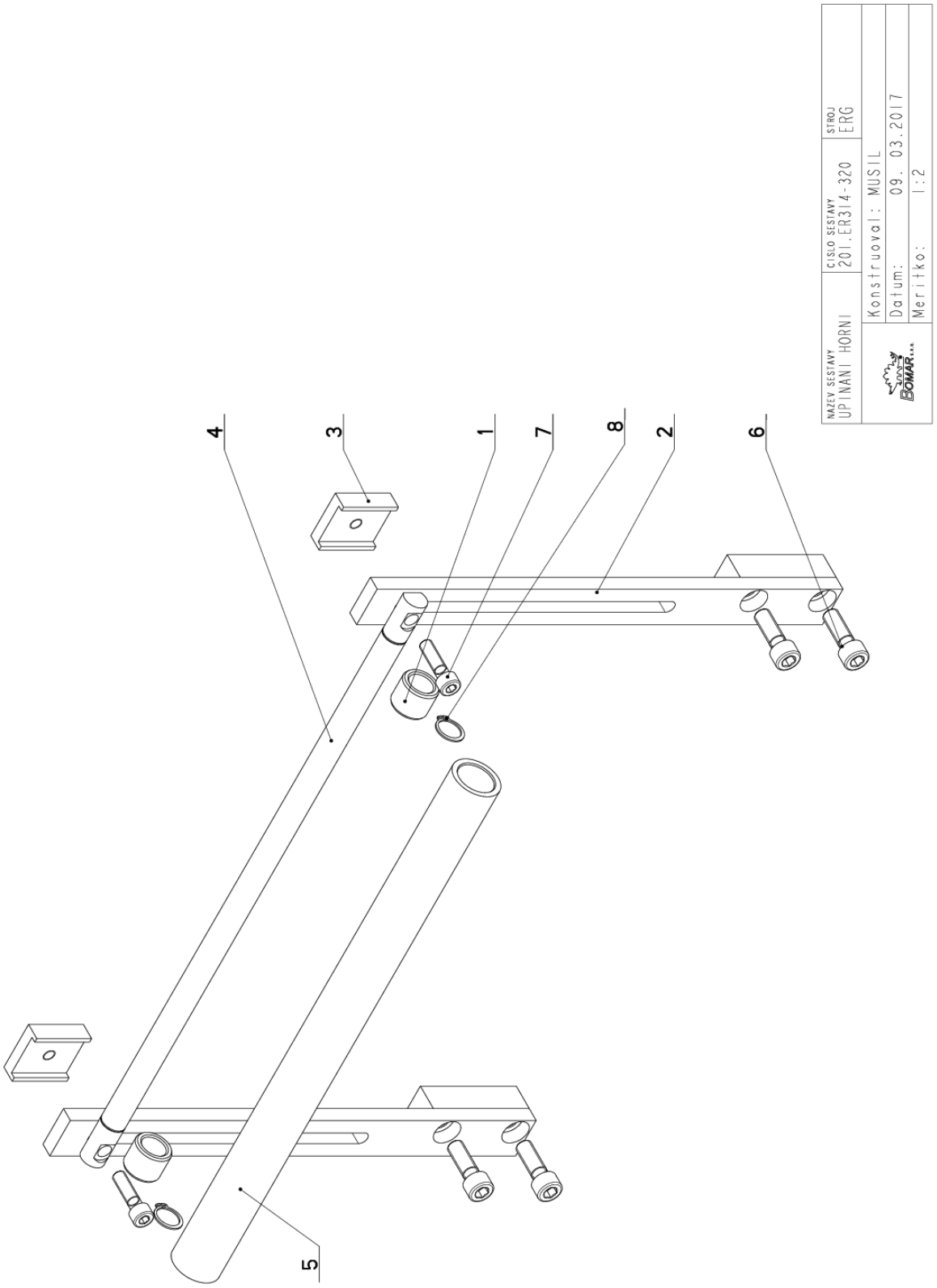

7.58. Kusovník / Piece list / Stückliste - Upínání horní / Top clam / Spannvorrichtung oben

Cislo Sestavy	Ver.	Nazev sestavy
201.ER314-320	0	UPINANI HORNI/TOP CLAM/SPANNVORRICHTUNG OBEN

Poz.	Objednaci cislo	Ver.	Nazev polozky	Rozmer	Ks
1	30.2114-311	0	POUZDRO / SLEEVE / BUCHSE	d 25	2
2	30.ER314-321	0	DRZAK / HOLDER / HALTER		2
3	30.ER314-322	0	DRZAK / HOLDER / HALTER	HR 40x12	2
4	30.ER314-323	0	TYC / POLE / STANGE	d 16h11	1
5	30.ER314-324	0	VALECEK / CYLINDER / ROLLE	TR32x5	1
6	90.001.25.048	0	SROUB IMBUS / ALLEN HEAD BOLT / IMBUSSCHRAUBE	M10X30	4
7	90.001.25.083	0	SROUB IMBUS / ALLEN HEAD BOLT / IMBUSSCHRAUBE	M8X30	2
8	95.800.007	0	SEGR HRIDEL. / OUTSIDE SAFETY RING / SICHERUNGSRING AUSSEN	POJISTNY KROUZEK 16	2

Cislo Sestavy/Number of assembly/Nummer der Baugruppe; Verze (Ver.)/Version/Version; Nazev sestavy/Assembly title/Name der Baugruppe; Pozice (Poz.)/Position/Position; Objednaci cislo/Purchase order number/Bestellnummer; Nazev polozky/Volume title/Name der Position; Rozmer/Stock size/Abmessung

Cislo Sestavy	Ver.	Nazev sestavy
201.ER314-355	1	PAKA/LEVER/HEBEL

Poz.	Objednaci cislo	Ver.	Nazev polozky	Rozmer	Ks
1	30.BC2314-327 (1)	0	TYC / POLE / STANGE	TR 20x5	1
2	30.BC2314-328 (1)	0	TYC / POLE / STANGE	TR 20x5	1
3	30.BC2314-329 (1)		TYC ZAVITOVA / THREADED POLE / GEWINDESTANGE	M10	1
4	30.ER314-356	0	TYC / POLE / STANGE	D 10	1
5	90.005.55.080	0	SROUB 6HRANNY / 6 SIDED BOLT / SECHSKANTSCHRAUBE	SROUB M10X80	1
6	90.101.55.002 (1)	0	MATICE / NUT / MUTTER	MATICE M10	6
7	90.150.50.006	0	PODLOZKA / WASHER / UNTERLEGSCHEIBE	PODLOZKA 10,5	1
8	95.170.001	0	HLAVICE / HEAD / KOPF	M10x1,25	1
9	95.170.007	0	HLAVICE / HEAD / KOPF	M10-LEVY	1

1.ZRUS. 30.BC2314-324, 90.005.55.025; PRID.30.BC2314-327, 30.BC2314-328, 30.BC2314-329, 2x90.101.55.002; 284/ZM455 7.12.2018 SCERBA

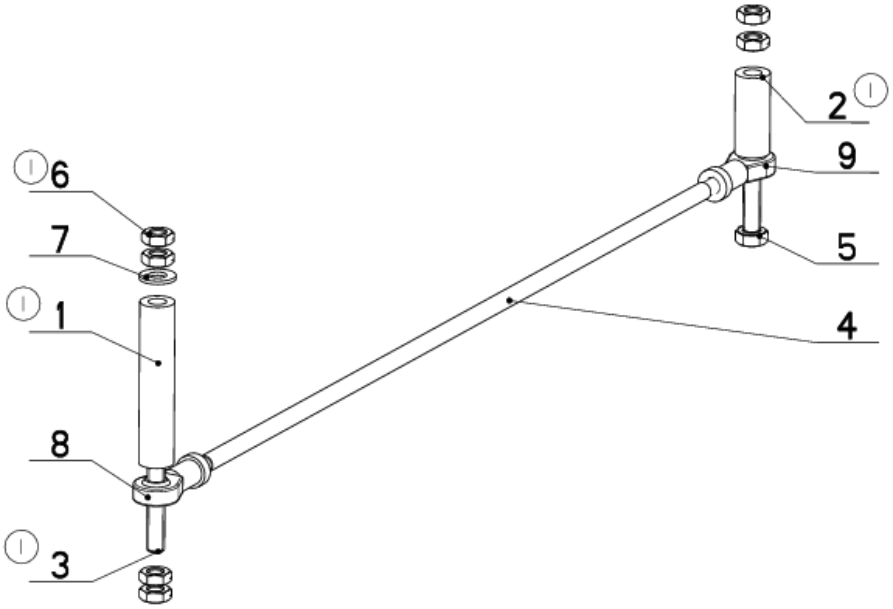

Cislo Sestavy/Number of assembly/Nummer der Baugruppe; Verze (Ver.)/Version/Version; Nazev sestavy/Assembly title/Name der Baugruppe; Pozice (Poz.)/Position/Position; Objednaci cislo/Purchase order number/Bestellnummer; Nazev polozky/Volume title/Name der Position; Rozmer/Stock size/Abmessung